Wind Induced Vibration of Cable Stay Bridges Workshop

April 25 –27, 2006 St Louis, MO

FREYSSINET LLC

New Developments in Cable Stay Vibration Suppression

Andrew Micklus, P.E.
COO FREYSSINET LLC

Table of Contents

1. Stay Cable System Details
2. Sources of Vibration
3. Review of Available Vibration Suppression Devices
4. Project Examples
5. Conclusions

Freyssinet Parallel Strand System (PSS)

- Bundle of individually protected strands
- Individual anchorage with wedges
- In an outer stay pipe

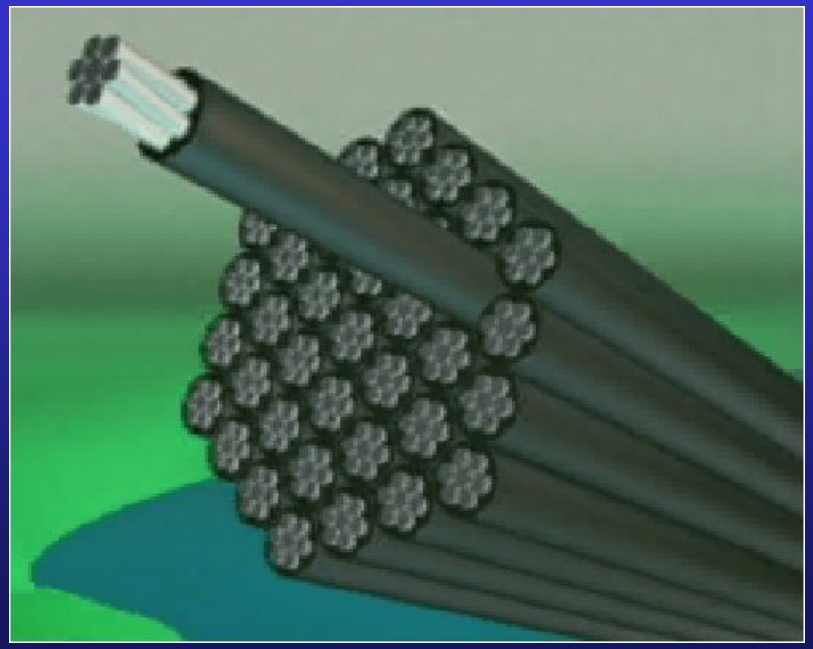

Parallel Strand Stay Cable System

- Hot dip galvanization
  - 190 to 350 g/m² of zinc
  - applied before final drawing of wires (no loss of ultimate strength)
- Wax filling around and within strand
  - adhesion properties ⇨ anti-corrosion layer
  - lubrication against fretting fatigue
  - prevents expense of zinc (redundancy)
- Semi-bonded HDPE coating (patented)
  - shape designed for semi-bond (only 12 g/m wax)
  - UV stabilized, shock resistant
  - Extruded on the strand

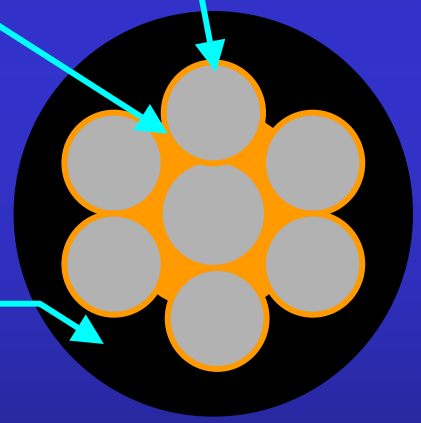

Stay Anchorage – General Layout

- Multi function compact anchorage

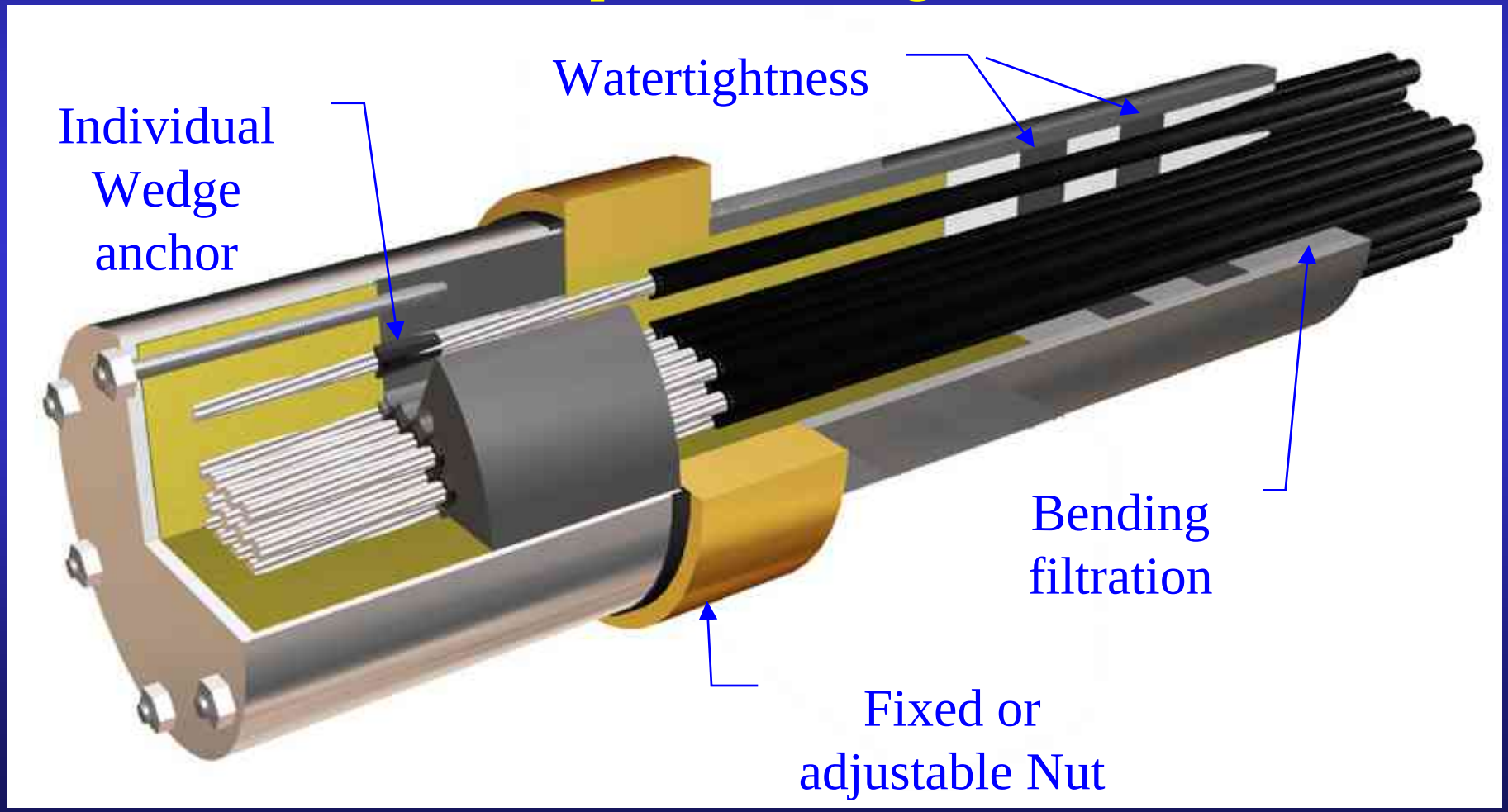

1. Freyssinet Stay Cable System

Stay Anchorage – Bending Filtration

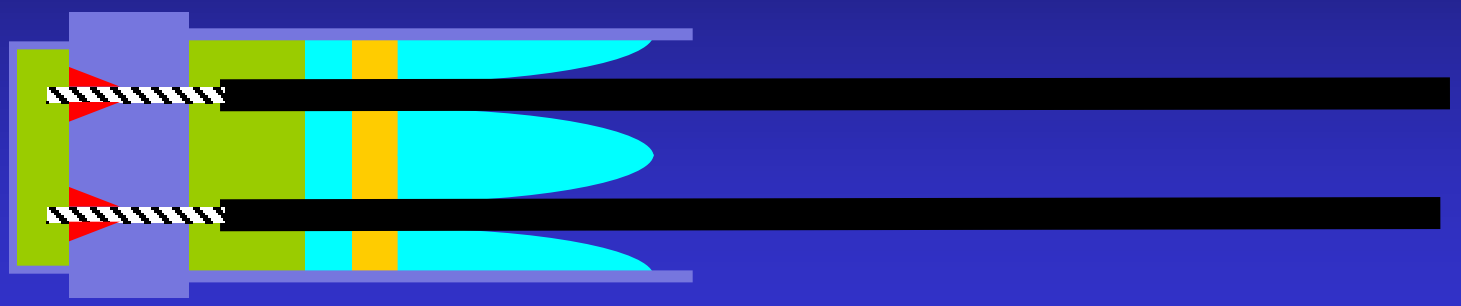

- Each strand is guided **individually** by a trumpet with **controlled curvature**

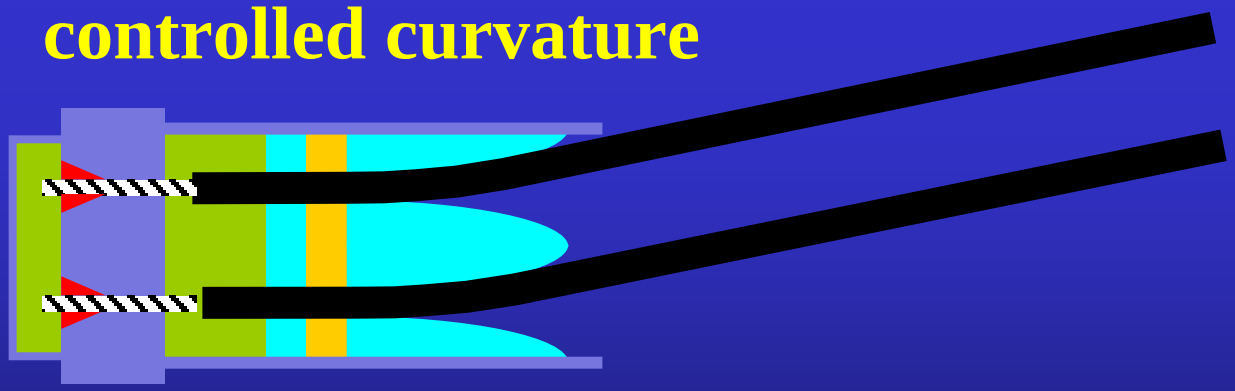

  - bending < 250 MPa in transition zone
  - bending < 50 MPa in anchorage
- Allows SLS design to 0.50 f_{GUTS} instead of 0.45

Testing – Mechanical Performance

- Nearly 100 multi-strand fatigue and ultimate tests according to PTI and CIP recommendations

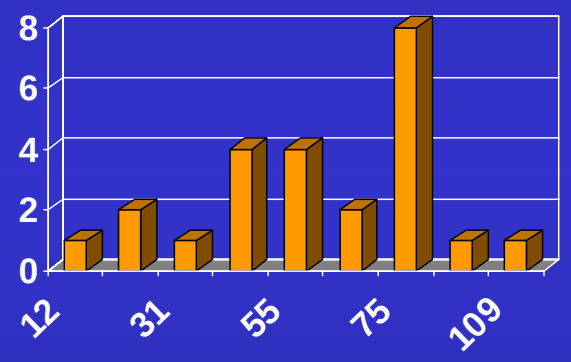

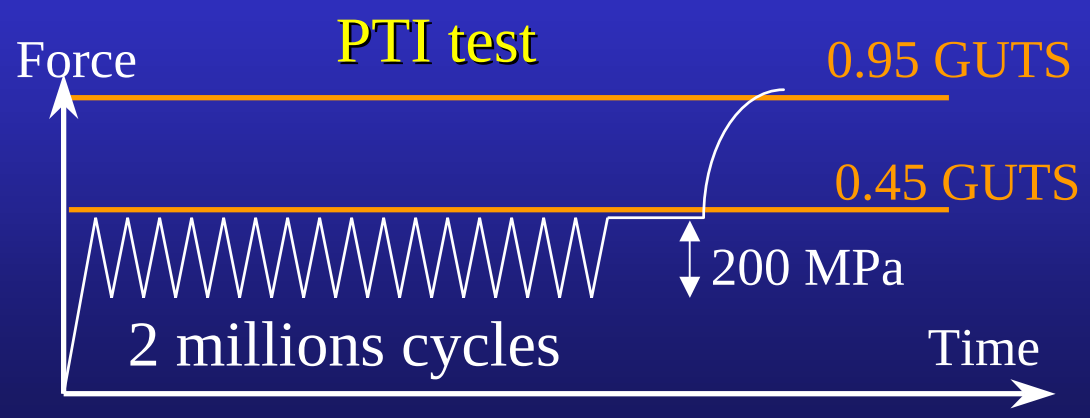

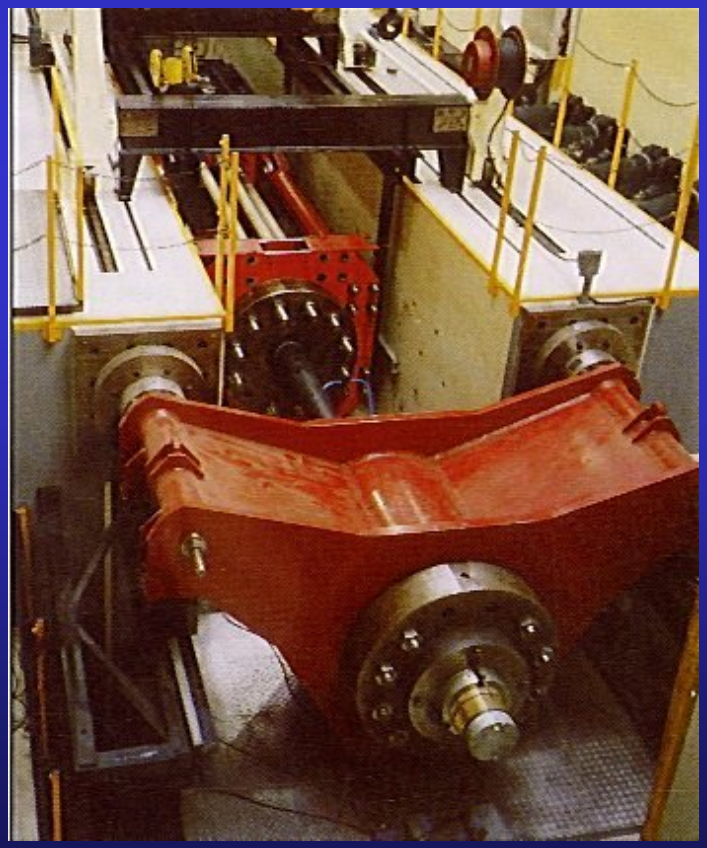

Testing - Waterproofing

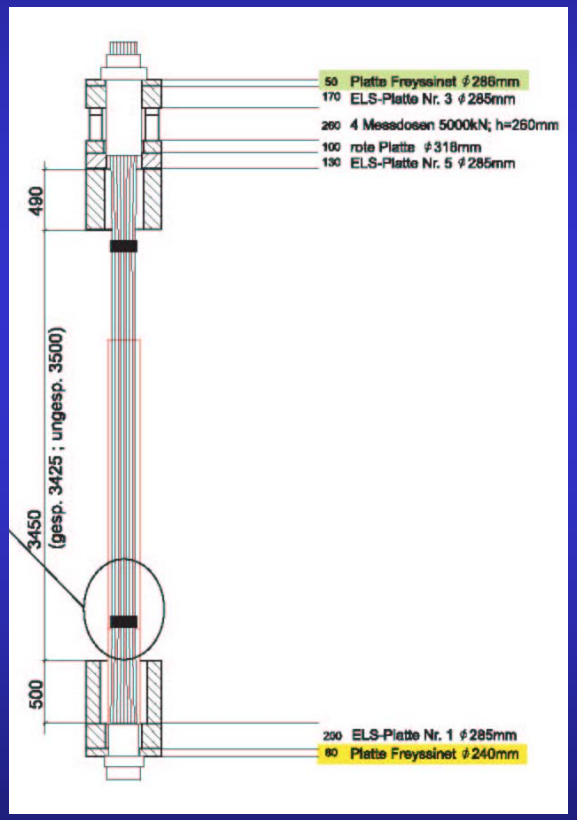

Freyssinet

Testing - CIP Waterproofing Test

Total test duration = 6 weeks

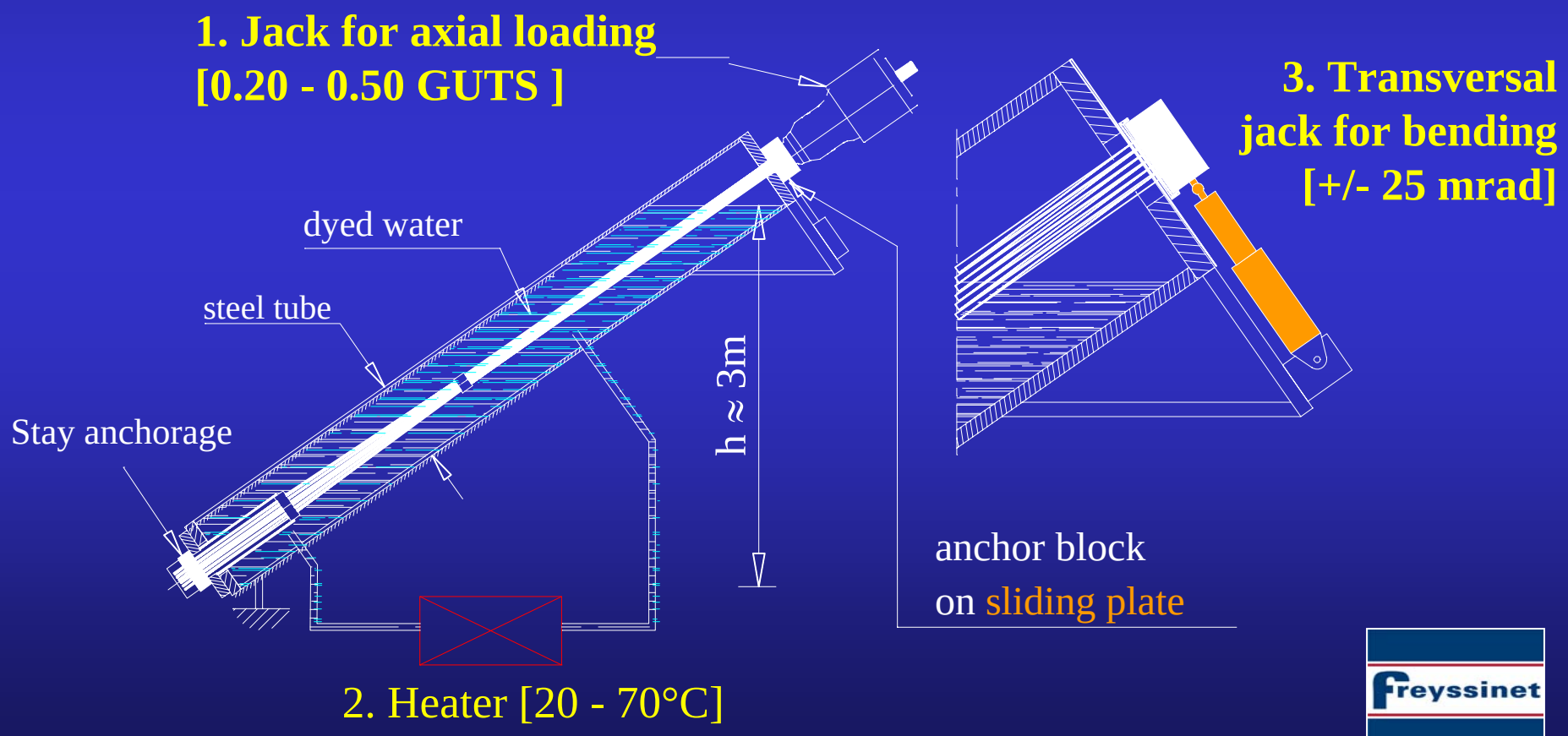

Stay Anchorage - Corrosion Protection

- Extension of outer anticorrosion barrier
  - Active stuffing box
  - Anchorage casing fully treated against corrosion
- Micro-crystaline wax injection
  - Reversible injection
  - Very high thermal stability (90°C)
- Passed rigorous testing
  - PTI Leak Test Reversible injection
  - CIP/SETRA Waterproofing Tests

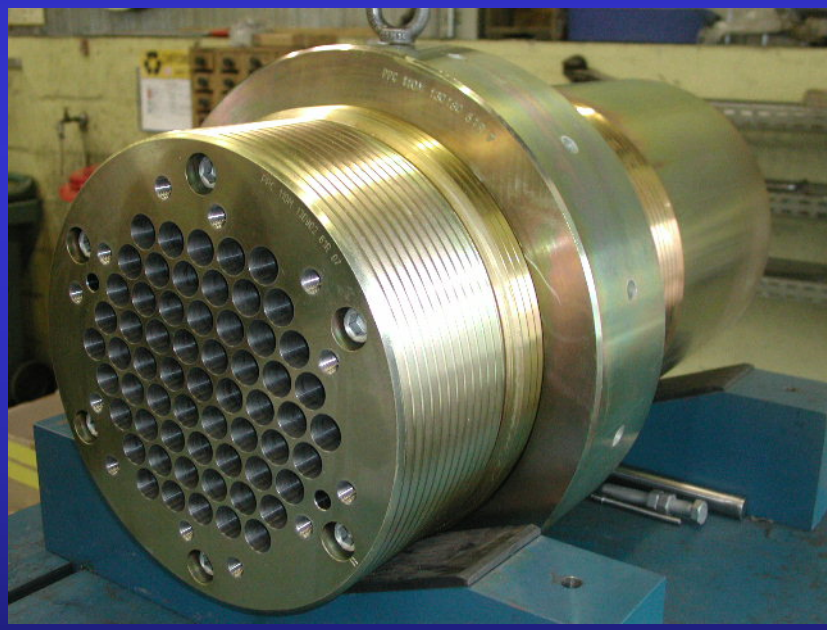

Testing - CIP Waterproofing Test

Vibration Sources

- Aerodynamic phenomena on stay cables are complex
- Numerous sources of vibrations, some of the most frequently encountered:

1. Rain & wind induced instability
2. Motion induced / parametric excitation
3. Vortex shedding / buffeting
4. Others (Wake galloping, ice accumulation galloping, etc)

Stay Cable Vibrations

- Stay Cables are Sensitive to Vibrations Due to Very Low Internal Friction (Intrinsic Damping)
  - Good fatigue behavior (low fretting)
    ☑ reduced intrinsic damping
  - Intrinsic damping can be increased with additional dampers (internal or external)

Rain/Wind Induced Vibrations

- In Case of Moderate Rain and Wind:
  - rivulets of water flow along the stay pipe
  - upper rivulet oscillates and creates stay instability
- Large Amplitude Vibration (over 1 meter)

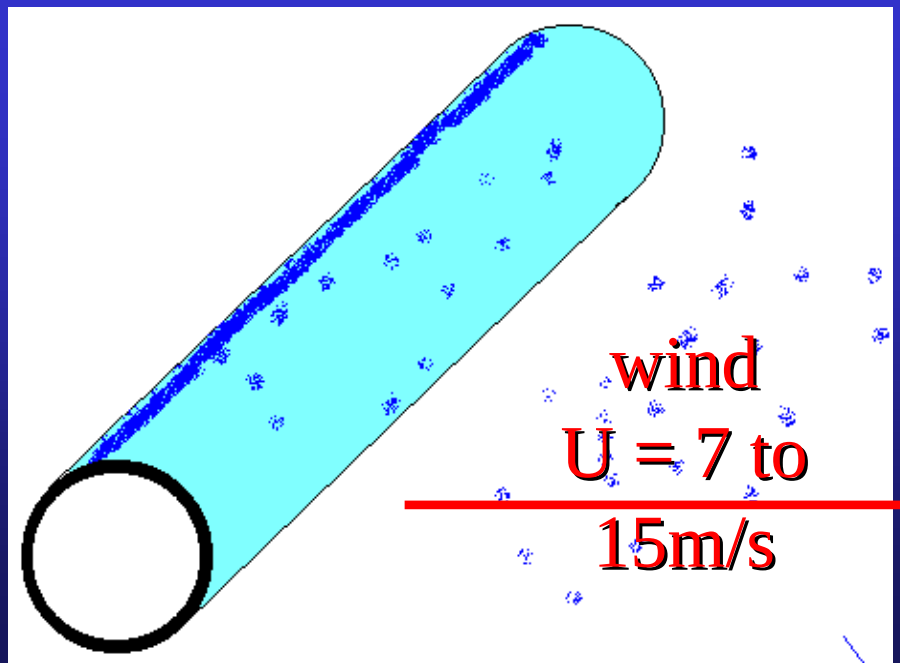

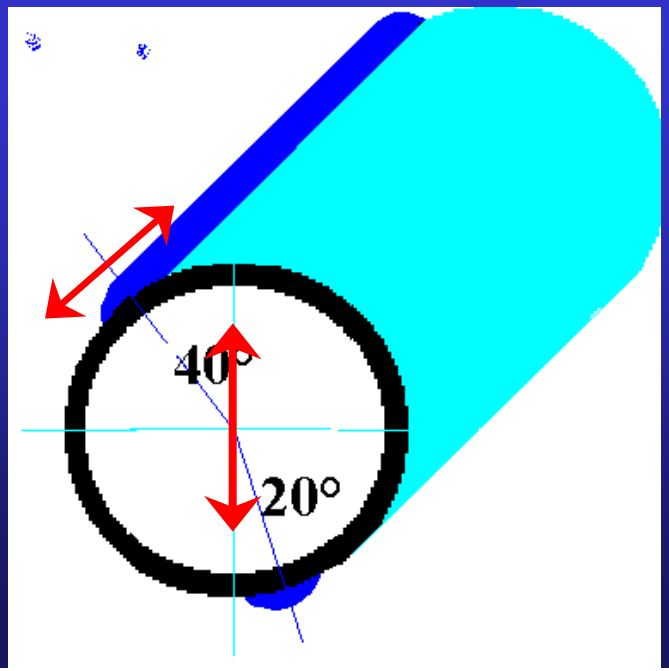

Rain/Wind Induced Vibrations

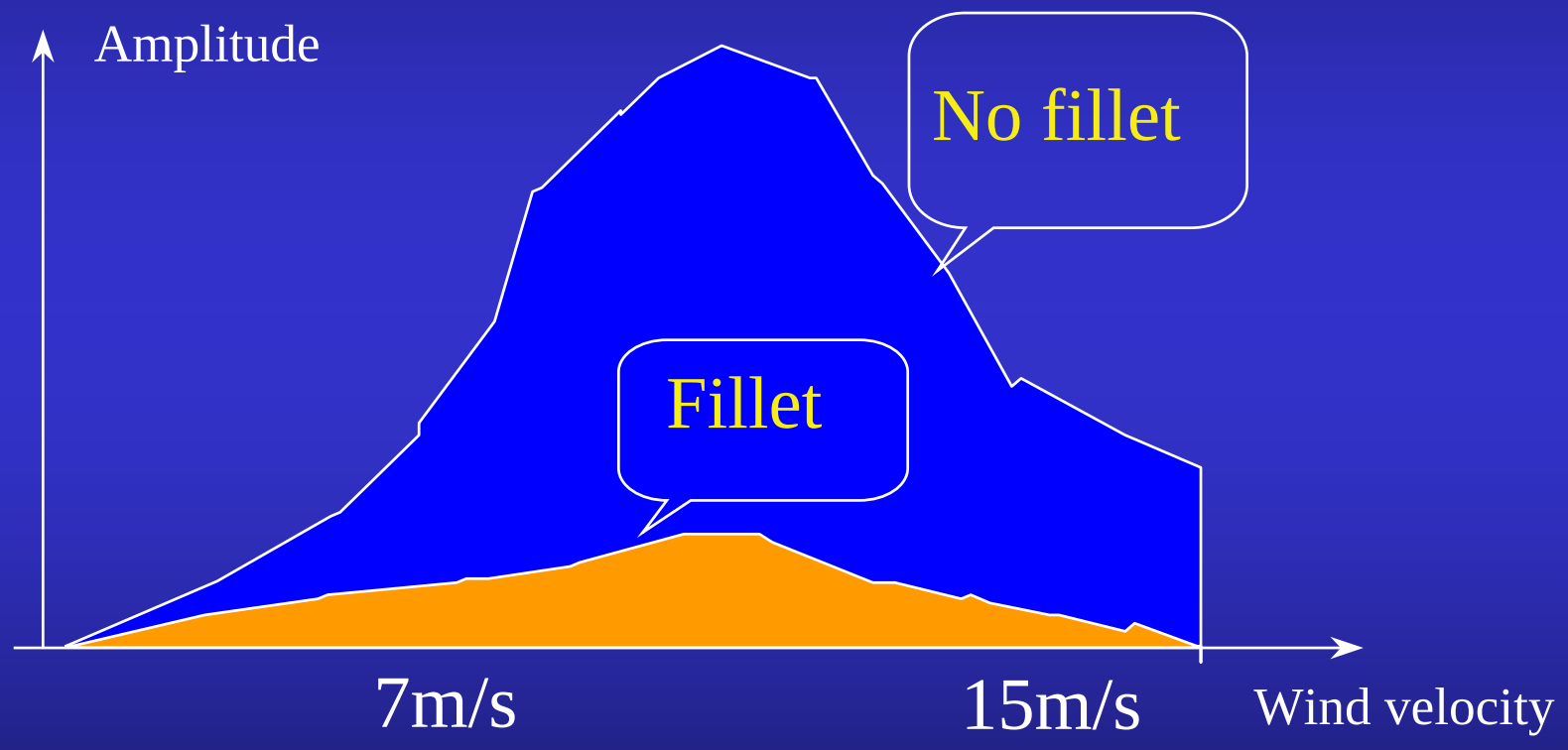

Motion Induced / Parametric Excitation

- Deck and pylon response to gusty winds
  - Deck displacement
  - Pylon displacement

  } ⇨ periodic displacement of stay anchorages

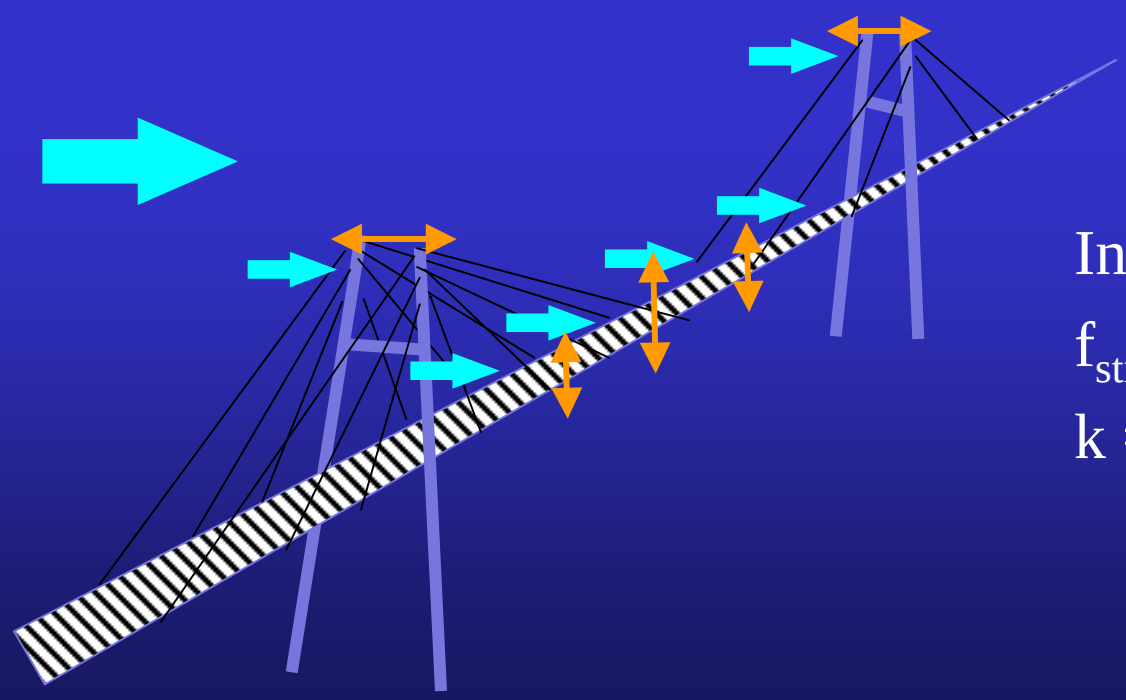

Instability when

$f_{struct} = k \cdot f_{stay}$

$k = ½, 1, 2$

Motion Induced / Parametric Excitation

- **Transversal** Excitation of Stay Anchorage

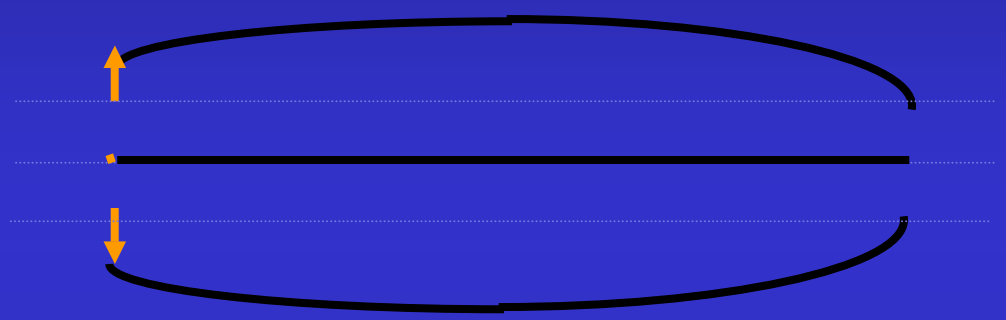

- Resonance: When Frequencies are Equal : $f_{struct} = f_{stay}$
- Stay Amplitude ~ Anchorage Amplitude Multiplied by $2/\delta$
  - 5 mm amplitude deck oscillations can generate +/- 500 mm stay oscillations
- Solution: Add damping

Motion Induced / Parametric Excitation

- **Longitudinal** Excitation of Stay Anchorage
- Instability When Frequencies Double:
- $\mathbf{f_{struct} = 2 \cdot f_{stay}}$
- Solution:
  - Place cross tie cables to shift stay frequencies

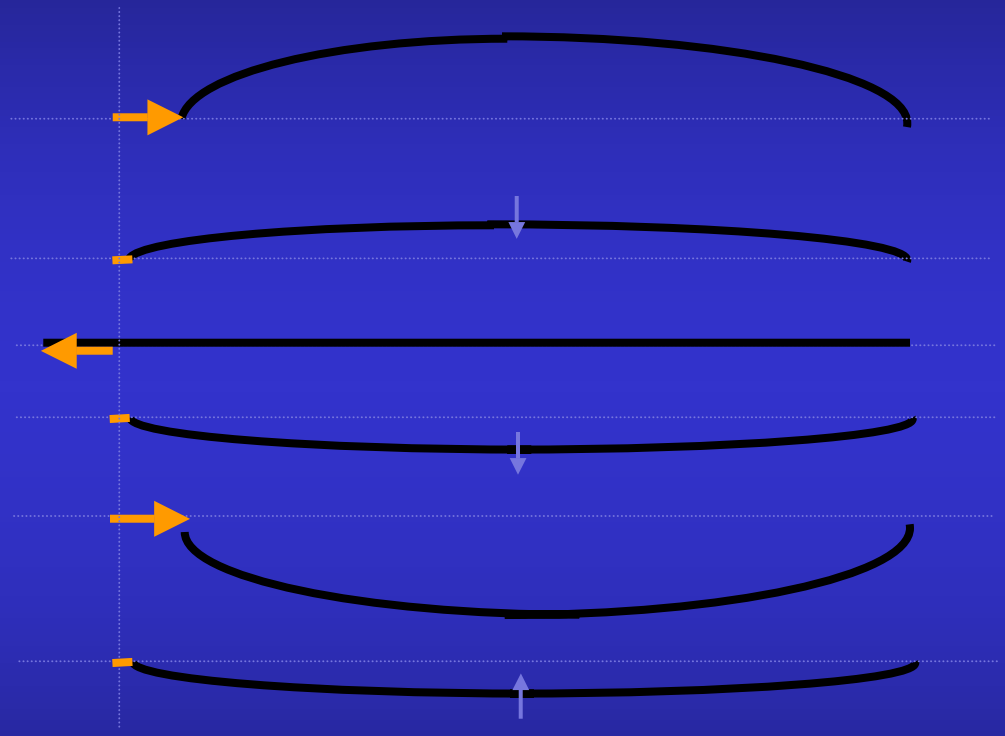

Vortex Shedding

- Obstacle in Laminar Air Flow ☑ Von Karman Vortices
- Vortex Shedding ☑ Oscillating Vertical Force F_v

$$F_v(t) = F\cos(2\pi f\ t)$$

$$\frac{f \cdot D}{U} = 0.22 = \text{Strouhal Number}$$

- No instability, but solution = increase damping

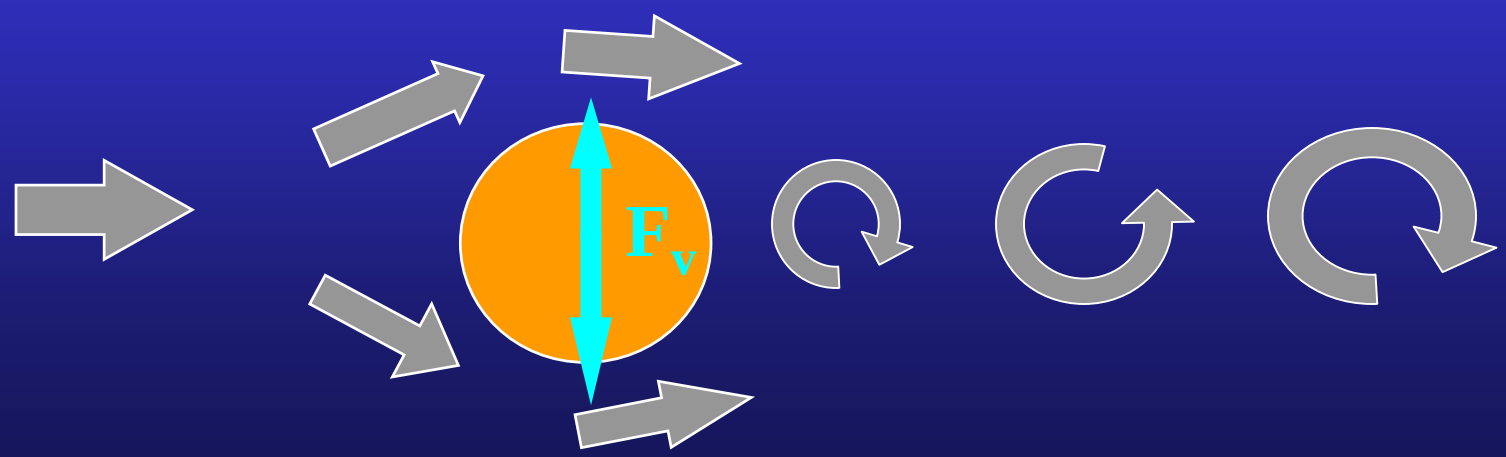

Stay Cable Vibrations
Buffeting

- Gusty Wind from Large Obstacles on Upstream Flow
- Dynamic Response of Stay Cables
  - amplitude depends on total damping $\delta_{tot} = \delta_{int} + \delta_{aero}$
- Limit Amplitude Under Moderate Wind (15 m/s)
  - increase intrinsic damping with additional dampers

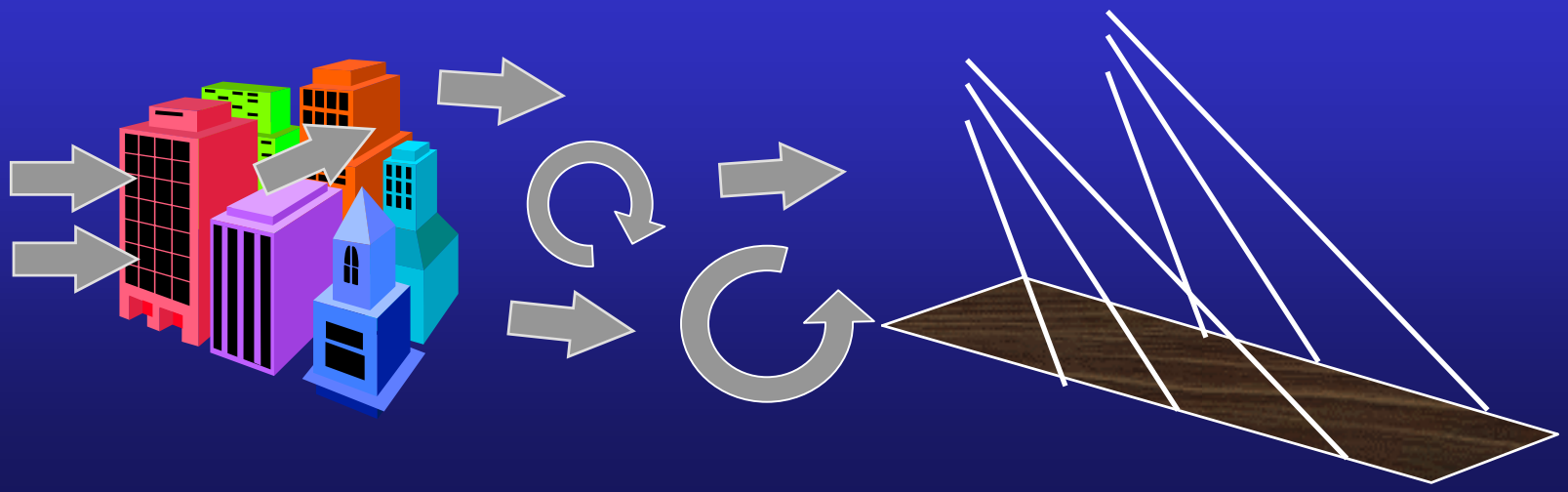

Stay Cable Vibrations
Wake Galloping

- Vortices from Upstream Cable
  - twin cables
  - longitudinal winds

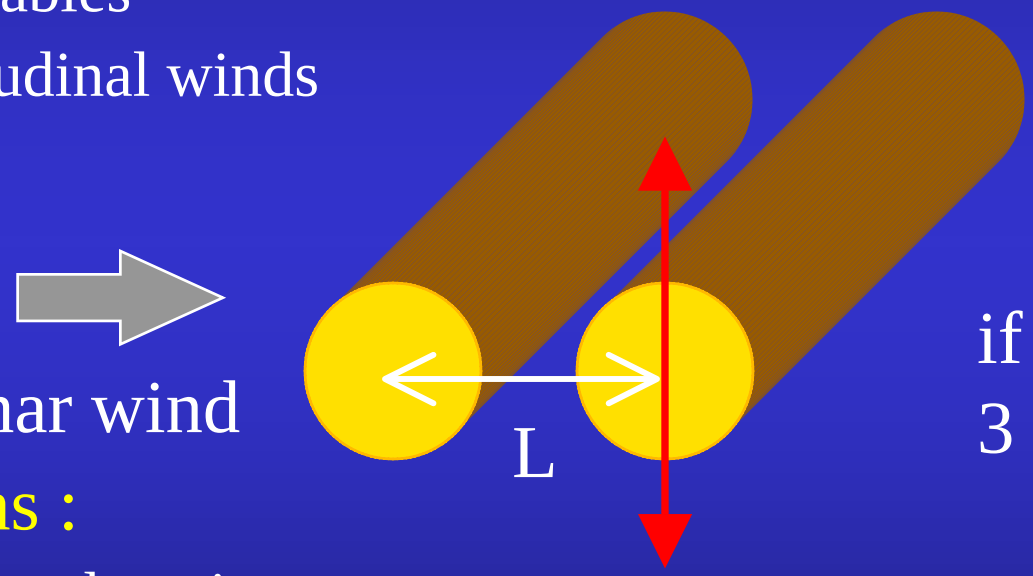

laminar wind

if L< x.D
3 < x < 5

- Solutions :
  - increase damping
  - place cross ties

Stay Cable Vibrations
Wake Galloping

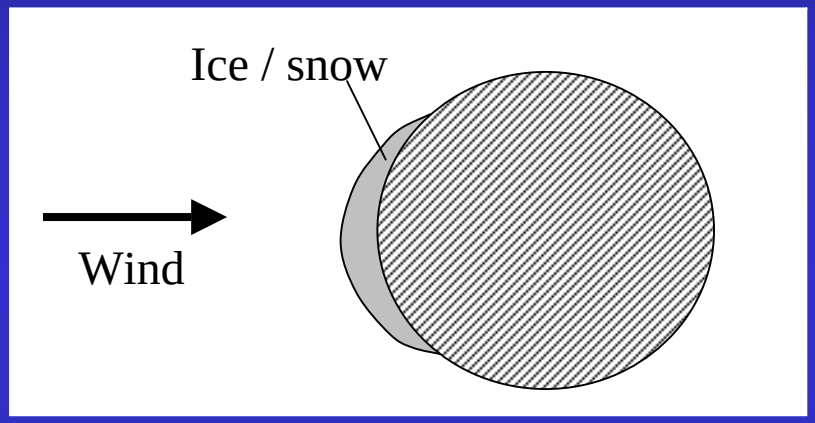

Ice Accumulation

Preventive Actions

- Profiled stay pipe
- Compact stay pipe
- Add damping devices
  - Internal dampers
  - External dampers
  - Tuned mass cable dampers
- Cross ties (aiguilles)
- Reduce bridge vibration
  - Deck profiling with spoilers,
  - Deck or pylon tuned mass damper

Profiled Stay Pipe

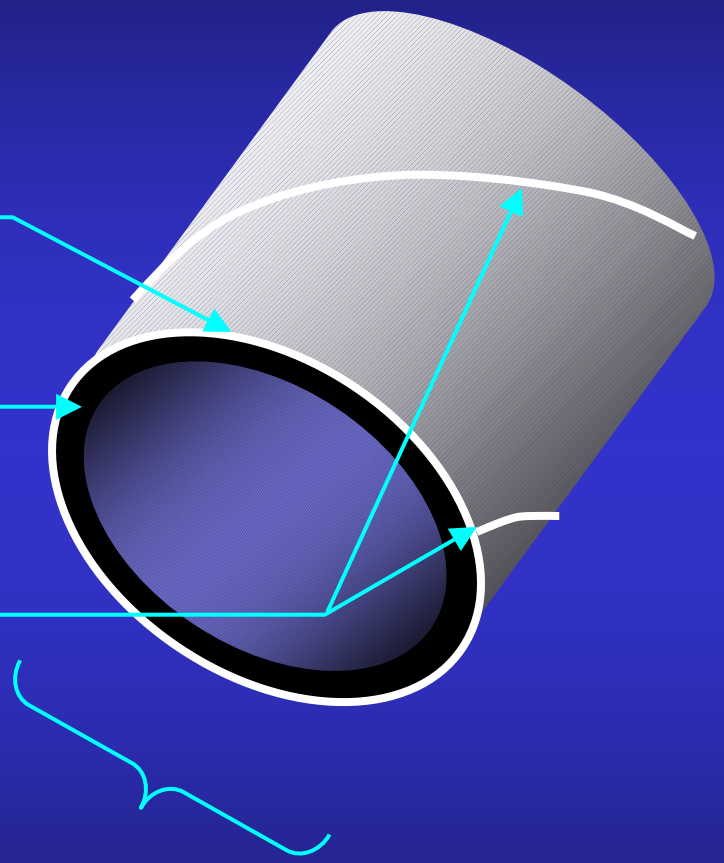

- External layer
  - color and UV protection
- Internal layer
  - mechanical resistance
- Two helical fillets
  - rain & wind induced instability
- Thickness / diameter ratio
  - adjusted for ungrouted solutions : ex 200mm x 6.2mm

Profiled Stay Pipe

- Freyssinet profiled helical rib
  - Initially for Normandy bridge twin shells
- Shape optimized for drag reduction
  - Drag factor $C_D = 0.60$,

Profiled Stay Pipe

- Freyssinet double helical rib
  - extruded during duct fabrication
  - disorganize water rivulets
  - prevents efficiently rain & wind vibration

- Tested in CSTB and DMI laboratories

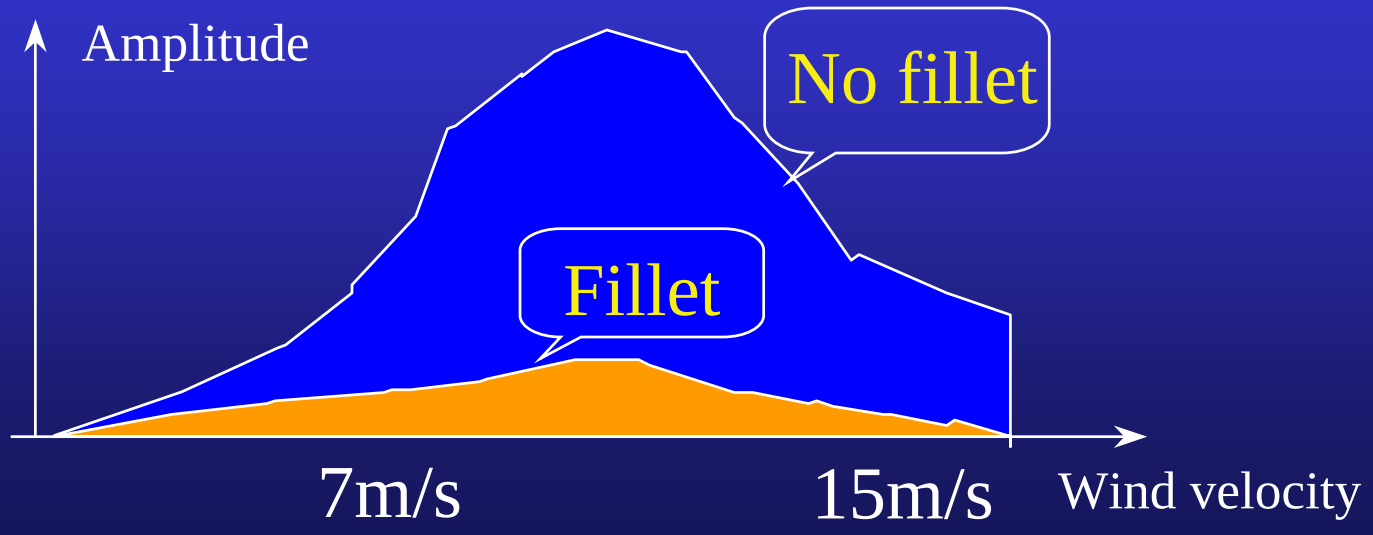

Profiled Stay Pipe

- Drag is a Concern on Long Stays (over 400 meters)

$$\text{drag} = \frac{1}{2}\rho_{air} U^2 D C_x$$

- Freyssinet Profiled Pipe : Lowest Drag Coefficient
- Reduce Diameter D: further minimize drag
  - special installation method
  - optimize components
  - compact stay pipe

Freyssinet Compact Stay System

- Drag force on a stay cable

$$drag = \frac{1}{2}\rho_{air}.U^2.D.C_D$$

- Static drag is cumulated over a large area on stays
- Severe load on bridge if
  - very long span (> 800 m)
  - single shaft pylon
- 22% Pipe OD Reduction

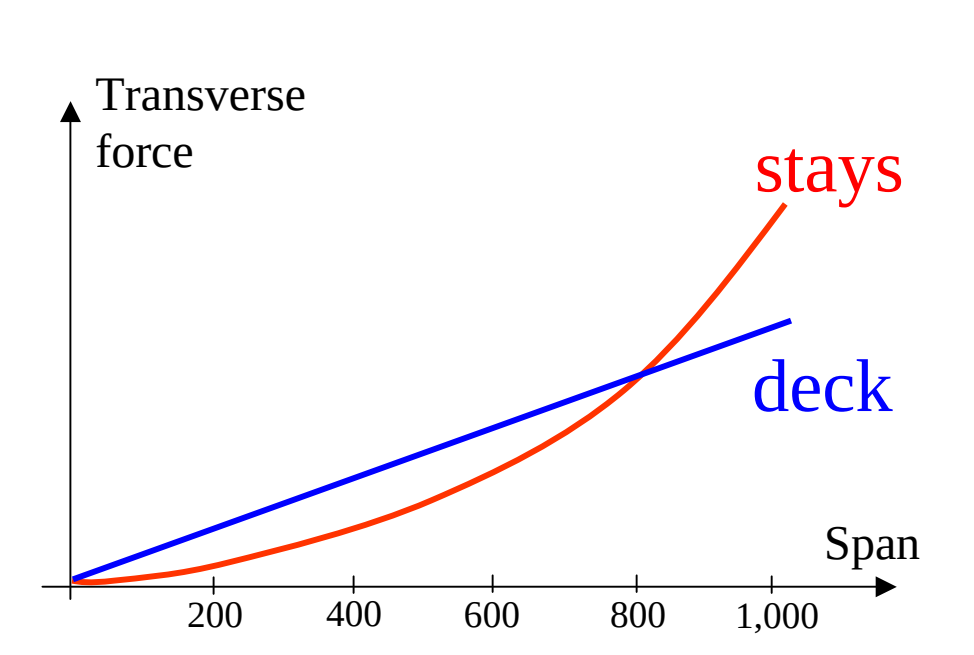

2Freyssinet compact stay pipe

- Reduced outer diameter D
  - 15.7 x 1860 MPa strand
  - special installation methods
  - Reduce D 22%

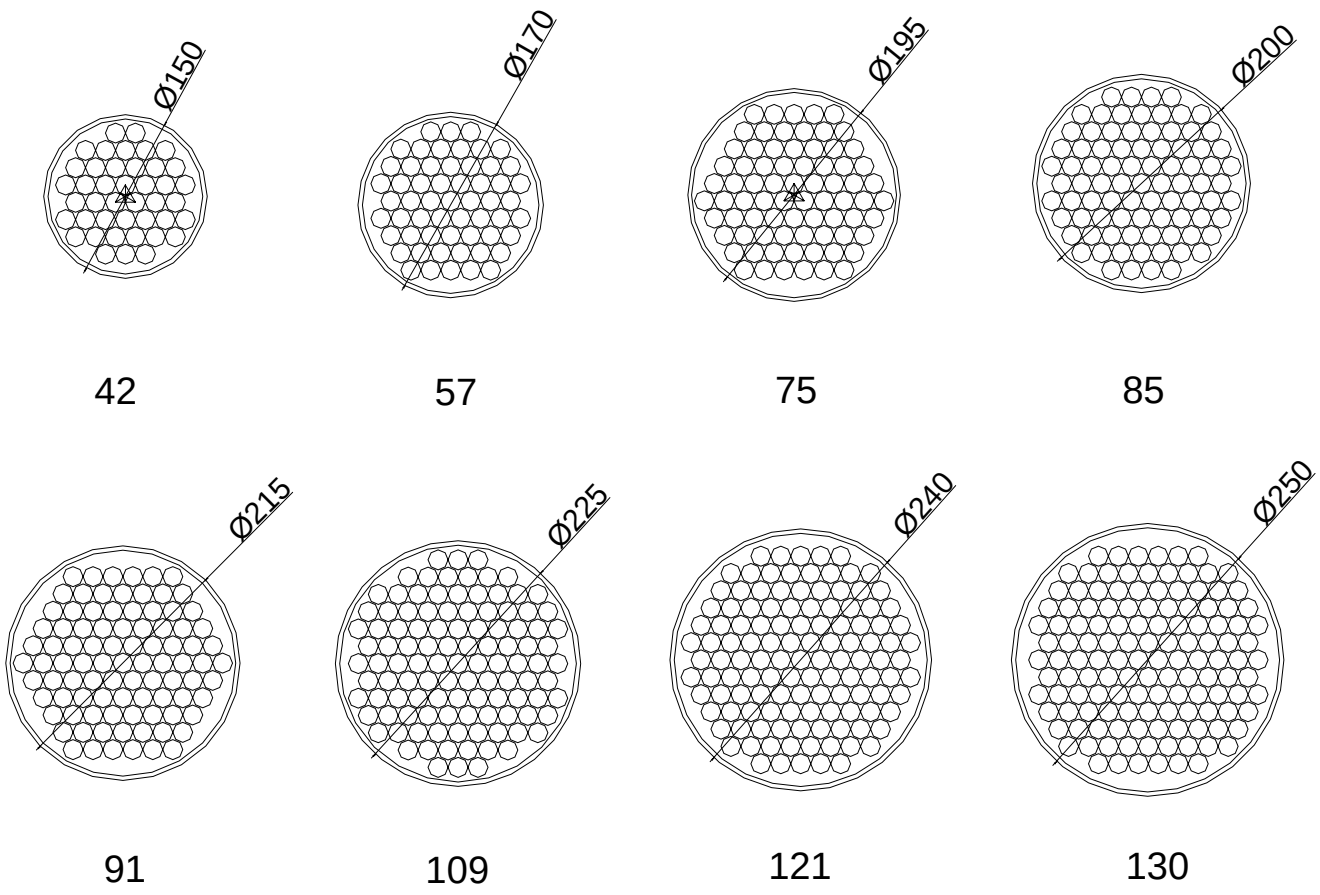

Internal Dampers

- Since 1994 Freyssinet has developed a range of internal dampers

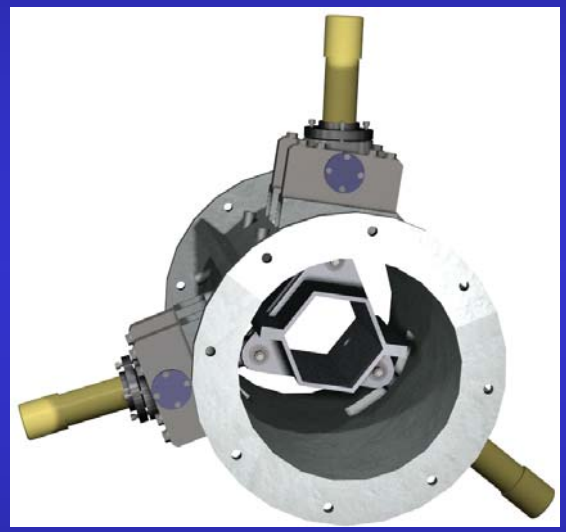

- Each system is replaceable and easy to maintain
- All systems have been fatigue tested

Internal Elastomeric Damper (IED)

Elastomeric diabolo made of high damping rubber

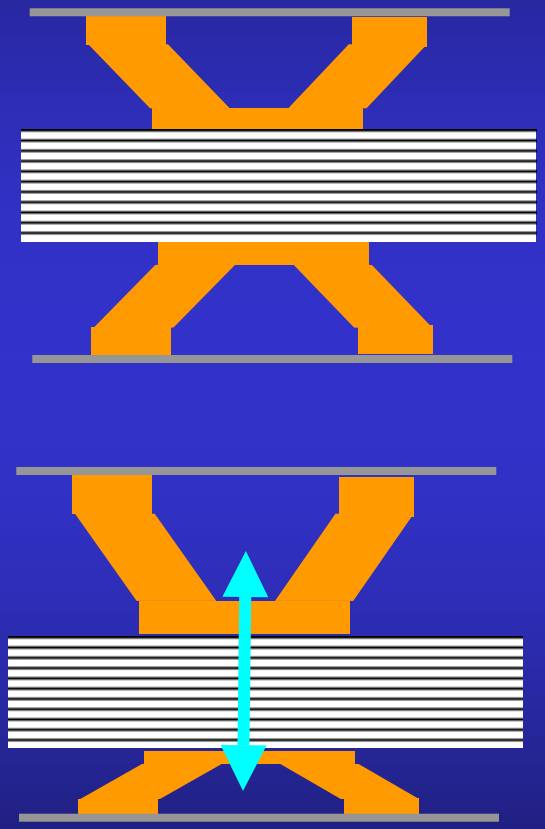

Internal Hydraulic Damper (IHD)

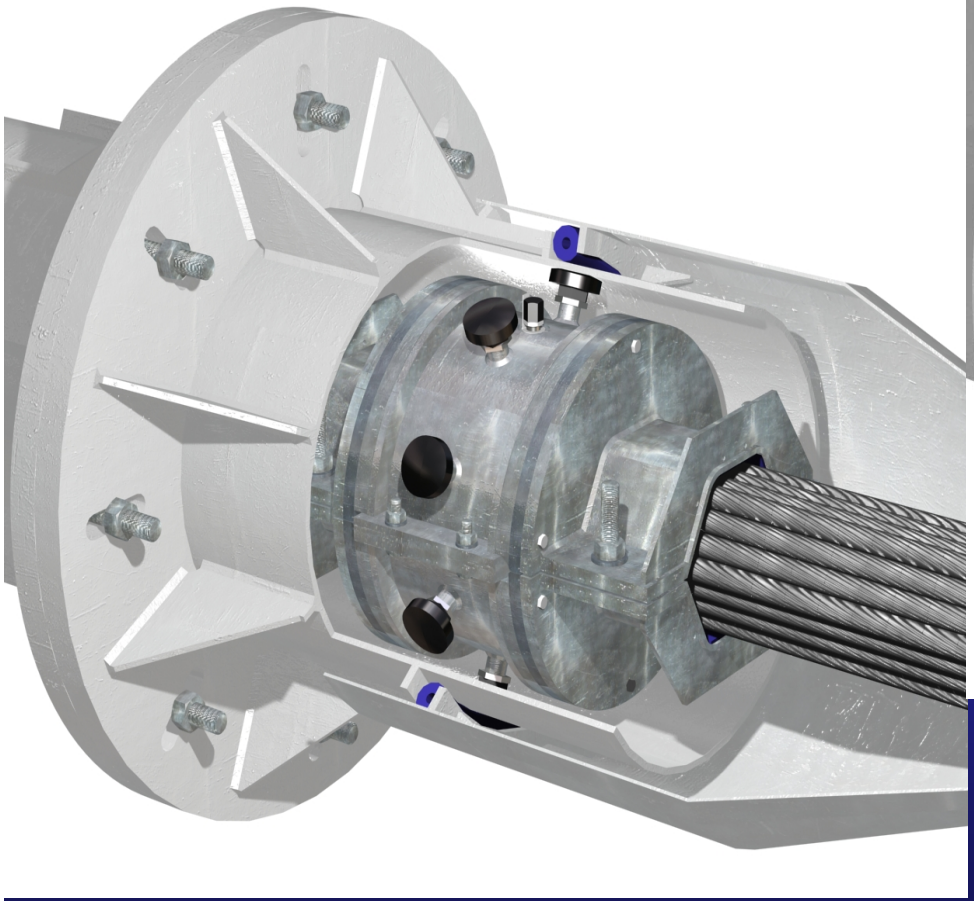

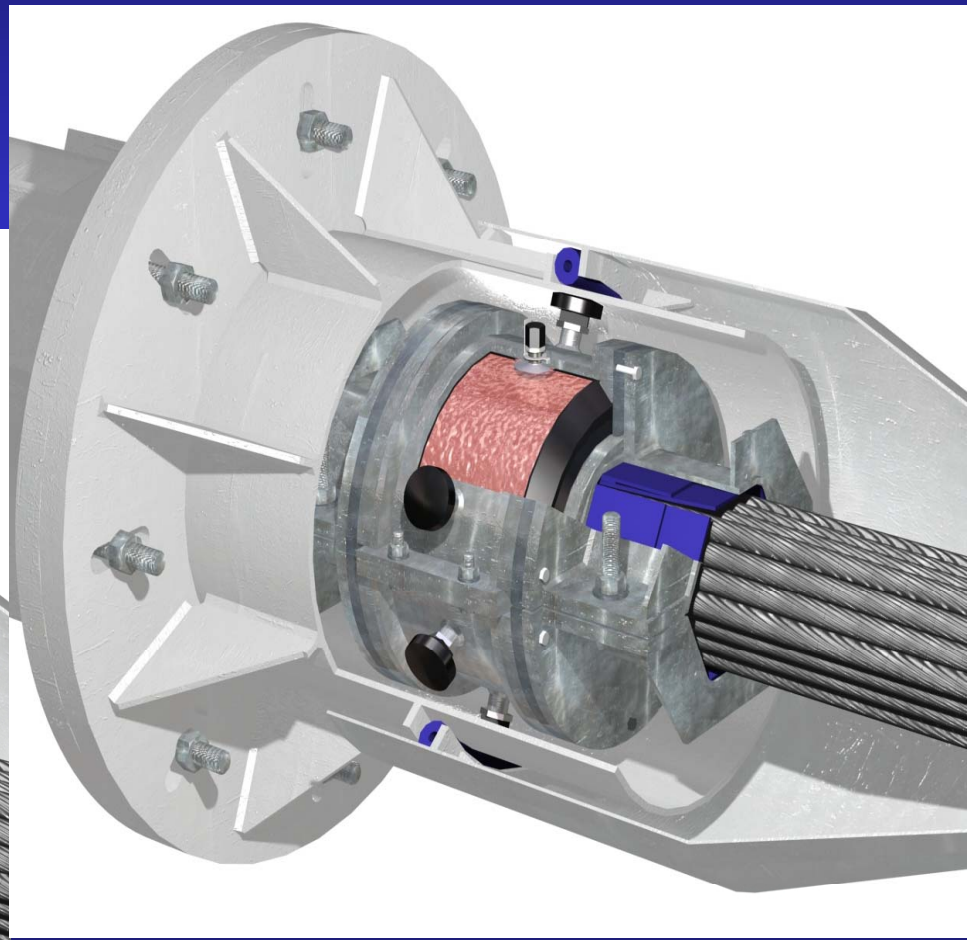

Internal Hydraulic Damper (IHD)

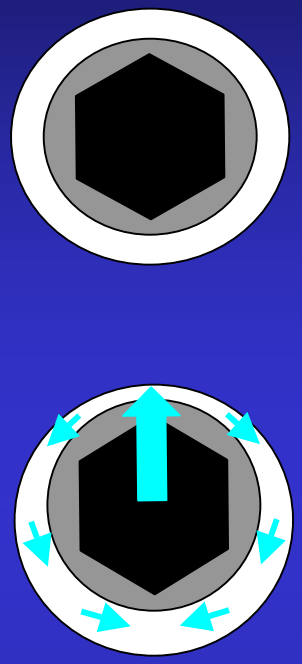

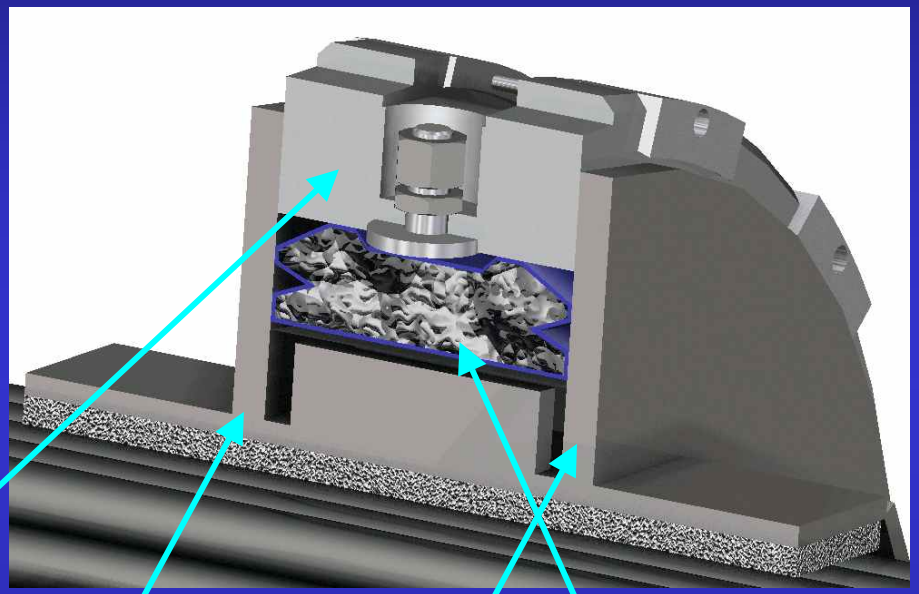

Movable piston

Viscous oil

Moving steel chamber

Internal Radial Damper (IRD)

- Low aesthetical impact
- Easy maintenance
- Replaceable
- Low dependence on T°

Internal Radial Damper (IRD)

- Easy and Fast installation
- Higher Stroke
- Increase of δ=5%
- Efficiency ↗ with A

Internal Radial Damper (IRD)

- Three radial piston dampers
- Steel collar clamped to cable
- Steel guide tube connected to the structure

Theoretical Limit to Damper Efficiency

- Damping depends on
  - distance **d** damper - anchorage
  - cable length **L**
- Theoretical limit

$$\delta_{opt} < \pi \frac{d}{L}$$

  - E.g. 300 m cable and d = 3 m then $\delta < 3\%$
- Critical for gussets or very long stays (L > 300m)

Viscous vs. Friction Dampers

Testing at the French National CEBTP

Testing for Sutong Bridge China on 92m (300 ft) Cables

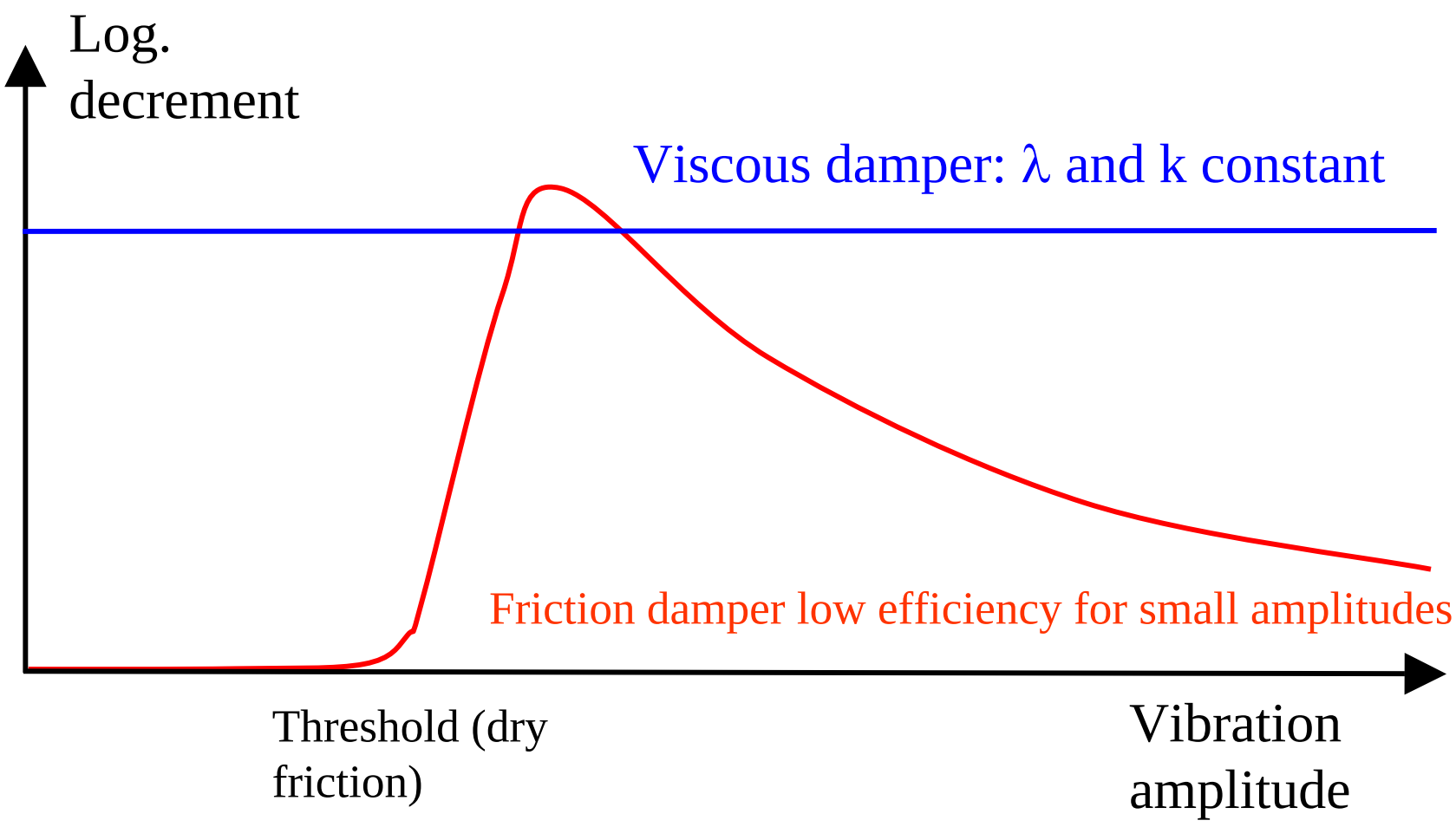

Fixed External Dampers (FED)

- Generally defined due to geometry:
  - distance d is too small
  - cable length too long
  - gussets not stiff enough

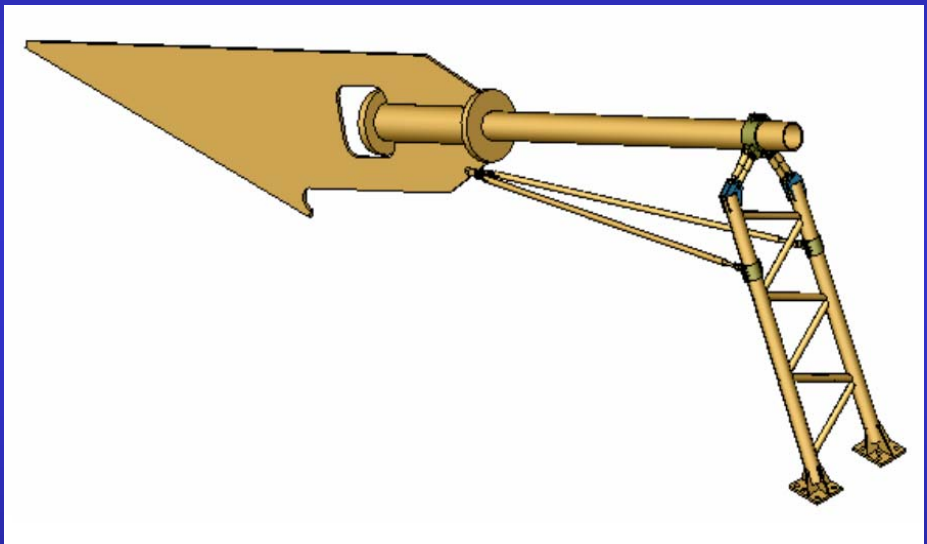

- Fixed external damper (FED): multiple pistons on fixed frame

Pendular External Dampers (PED)

- Two piston dampers on articulated lever
  - Normandy
  - Ting Kau

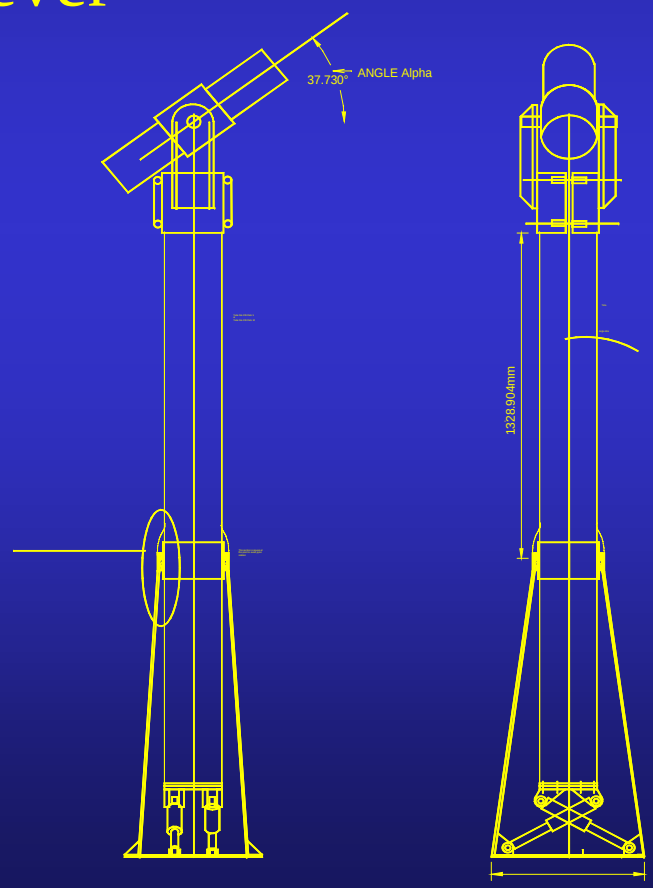

Cross Ties

- Provide "fix" point along stay cable
  - shift stay modal frequency
  - E.g. only even modes with one cross tie in the middle
- Useful for very long stays
  - In case of parametric instability
  - Over 400 meters
- Special cross tie system for Normandy Bridge
  - 3 years of R&D

Cross Ties

- Use of a specifically designed cable
  - continuous cable
  - symmetrical around stay cable
  - high damping rope
- Anchorage
  - high fatigue resistance
  - bending filtration

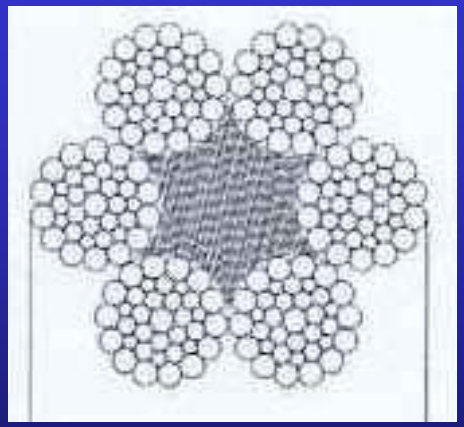

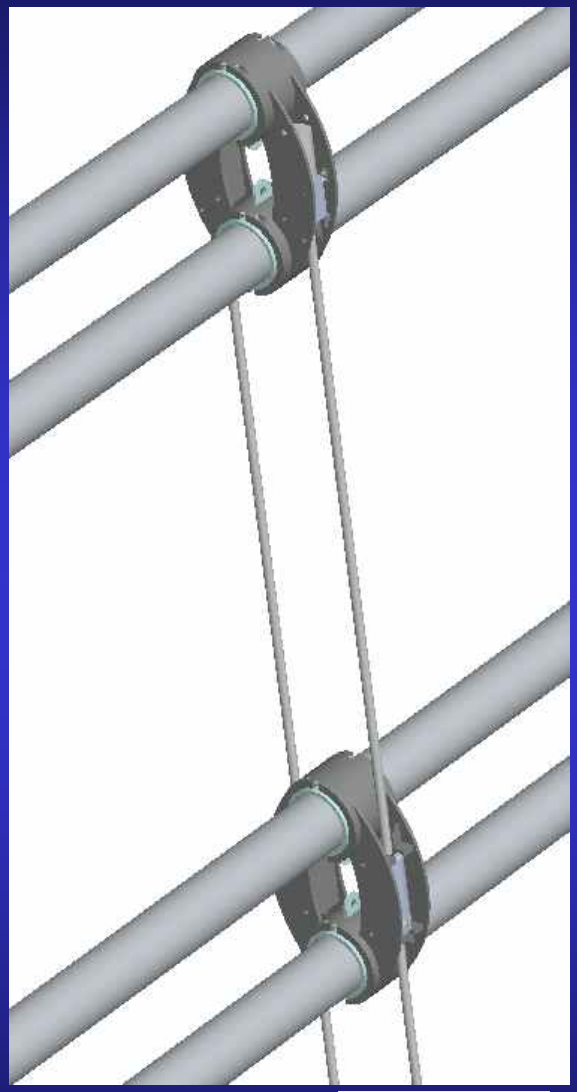

Tuned Mass Dampers

- Log Decrement up to 10%
- Spring-Mass system : same mass in both tubes
- M and k adapted to the damping requirements

Damper Tests Results
Cooper River Bridge

Stay Number	Damper Type	N° of measurement	Design Criteria	Average Value
202N	SIHD	4	3%	6.11%
207N	SIHD	5	3%	3.65%
210N	DIHD	5	3%	3.79%
216S	EHD	7	6%	13.62%

Alternate Techniques

- Windshield/Spoiler
- Stucture Mass Tuned Dampers

Applications of IED

Dee Crossing Bridge (France - 1977)

Vasco Da Gama Bridge Over the Tagus River (Portugal - 1998)

Charles River Bridge (USA - 2002)

Millau Viaduct (France - 2004)

Bridge Over the Vistula in Plock (Poland - 2004)

Ice Rink of Moscow (Russia - 2004)

Applications of IED

Millau Viaduct

Applications of IED

Charles River Bridge

Applications of IHD

Vasco Da Gama Bridge Over the Tagus River (Portugal - 1998)

Ting Kau (Hong Kong - 1998)

Oresund Bridge (Sweden - 2000)

My Thuan (Vietnam - 2000)

Seohae Grand Bridge (South Korea – 2002)

Bridge Over Panama Canal (Panama - 2004)

Millau Viaduct (France - 2004)

Bridge Over the Vistula in Plock (Poland - 2004)

New Cooper River Bridge (USA - 2005)

Shenzhen Western Corridor Bridge (Hong Kong - 2005)

Bai Chay Bridge (Vietnam - 2006)

Bridge Over Rio Orinoco (Venezuela - 2006)

Applications of IHD

Orinoco Bridge

Panama Bridge

Applications of IHD

Cooper River Bridge

Applications of IHD

- No aesthetical impact
- Stroke 40mm (1.6”)

Cooper River Bridge

Applications of IRD

Oresund Bridge (Sweden - 2000)

Shenzhen Western Corridor Bridge (Hong Kong - 2005)

Bai Chay Bridge (Vietnam - 2006)

Southern Outer Bangkok Ring Road (Thailand - 2007)

Applications of IRD

Bai Chay Bridge

Applications of IRD

Oresund Bridge

Applications of FED

Brotonne Bridge (France - 1977)

Iroise Bridge Over the Elorn River (France - 1994)

New Cooper River Bridge (USA - 2005)

Applications of FED

Elorn Bridge

Applications of FED

Cooper River Bridge

Applications of FED

Applications of PED

Normandy Bridge (France - 1995)

Ting Kau (Hong Kong - 1998)

Rion Antirion Bridge (Greece - 2004)

Applications of PED

Normandy bridge

Applications of Cross Ties

Normandy Bridge (France - 1995)

Second Severn Bridge (UK - 1996)

Oresund Bridge (Sweden - 2000)

Charles River Bridge (USA - 2002)

Rion Antirion Bridge (Greece - 2004) : Provisional

New Cooper River Bridge (USA - 2005) : Provisional

Applications of Cross Ties

Normandy Bridge

Normandy Bridge

Applications of Cross Ties

Normandy bridge

Cooper River Bridge

Conclusions

- Incorporate damper design at the structure design stage, preferred over a post-construction “fix”
- In depth dynamic analysis of the structure
- Selection of anchoring scheme influences damper selection and efficiency
- Adapt solutions on a case-by-case (cable-by-cable) basis for vibration mitigation
- Consider combination of dampers and alternative means

Conclusions

- Considerations:
  - Stay length
  - Environmental considerations
  - Seismic considerations
  - Anchorage details (maximize “d” between damper & anchor)
  - **Stay pipe with double helical rib: always**
- Locate dampers at deck level for ease of inspection & maintenance combination of dampers and alternative means

Conclusions

- For **Preliminary** Damper Design Guidelines:

Stay length	Recommended damper
L < 80 m	IED
80 < L < 150 m	IHD
150 < L < 300 m	IRD or FED
L > 300 m	IRD or PED

- Provision for cross ties: if L >150 m and risk of parametric excitation

Thank You!