PLANS FOR

MISSOURI DEPARTMENT OF TRANSPORTATION

REST AREA SEWER SYSTEM IMPROVEMENTS

CAPE GIRARDEAU, FRUITLAND, MISSOURI

SEC. 1 – T32N – R12E

BENCHMARKS

TBM #1
SET CHISELED "X" IN ℄ CONCRETE CURB @ SOUTHWEST CORNER OF REST AREA, @ WEST SIDE OF 1ST PARKING SPOT @ 5TH PARKING AREA, 150'± SOUTHWEST OF REST AREA.
SET ELEVATION = 613.78

(SEE SITE PLAN FOR LOCATION)

GENERAL CONSTRUCTION NOTES:

- SIGNAGE NEEDS TO BE MOVED BEFORE CONSTRUCTION IN THE PROSPECTIVE AREA AND REPLACED AFTER CONSTRUCTION OF THE GIVEN AREA HAS BEEN COMPLETED.
- POWER POLES IN THE EFFECTED AREA NEED TO BE BRACED DURING CONSTRUCTION
- ALL UTILITIES MUST BE LOCATED PRIOR TO CONSTRUCTION
- ALL TELEPHONE LINE THAT REQUIRE NEW PLACEMENT THE CONTRACTOR IS RESPONSIBLE TO COORDINATE WITH THE TELEPHONE COMPANY.

NOTES TO CONTRACTOR:

1. THE LOCATIONS OF UTILITY MAINS, STRUCTURES AND SERVICE CONNECTIONS PLOTTED ON THIS DRAWING ARE APPROXIMATE ONLY AND WERE OBTAINED FROM RECORDS MADE AVAILABLE TO SKW, INC. THERE MAY BE OTHER EXISTING UTILITY MAINS, STRUCTURES AND SERVICE CONNECTIONS NOT KNOWN TO SKW, INC. AND NOT SHOWN ON THIS DRAWING. THE VERIFICATION OF EXISTENCE OF, AND THE DETERMINATION OF EXACT LOCATION OF, UTILITY MAINS, STRUCTURES AND SERVICE CONNECTIONS SHALL BE THE RESPONSIBILITY OF THE CONSTRUCTION CONTRACTOR(S).
2. NOTIFY UTILITY COMPANIES OF THE SCHEDULE PRIOR TO EACH STAGE OF CONSTRUCTION.
3. PRIOR TO CONSTRUCTION, THE CONTRACTOR SHALL UNCOVER EXISTING UTILITIES AT CRITICAL LOCATIONS TO VERIFY EXACT HORIZONTAL AND VERTICAL LOCATIONS.
4. THE MEANS OF THE WORK AND THE SAFETY OF THE CONTRACTOR'S EMPLOYEES ARE SOLELY THE RESPONSIBILITY OF THE CONTRACTOR.
5. NO WORK SHALL BE PERFORMED BEYOND THE PROJECT LIMITS WITHOUT PRIOR AUTHORIZATION FROM THE OWNER'S REPRESENTATIVE.
6. PROTECT EXISTING UTILITIES DURING CONSTRUCTION.
7. MAINTAIN POSITIVE DRAINAGE ON THE SITE THROUGHOUT THE PROJECT DURATION.
8. SITE CLEAN–UP SHALL BE PERFORMED ON A DAILY BASIS. SIDEWALKS, PARKING LOT, ROADWAYS, ETC. SHALL BE KEPT CLEAN AT ALL TIMES. DISPOSAL OF DEMOLITION ITEMS OFF–SITE.
9. ALL OPEN EXCAVATIONS SHALL BE PROTECTED.
10. REPLACE ANY PROPERTY MONUMENT REMOVED OR DESTROYED BY CONSTRUCTION. MONUMENTS SHALL BE SET BY A LAND SURVEYOR REGISTERED TO PRACTICE IN THE STATE OF MO.
11. MINIMIZE DUST SPREADING FROM ALL WORK AND STAGING AREAS.
12. ANY WORK REQUIRED TO COMPLETE THE SCOPE OF THIS PROJECT BUT NOT SPECIFICALLY CALLED OUT, SHALL BE CONSIDERED INCIDENTAL TO THE PROJECT. NO ADDITIONAL COMPENSATION SHALL BE ALLOWED FOR THE COMPLETION OF THIS WORK.
13. REPAIR OR REPLACE EXISTING FACILITIES (CURB, PAVEMENT, UTILITIES, ETC.) TO REMAIN, AT NO ADDITIONAL EXPENSE TO THE OWNER.
14. WORK WHICH DOES NOT CONFORM TO THE REQUIREMENTS OF THE CONTRACT WILL BE CONSIDERED UNACCEPTABLE. UNACCEPTABLE WORK, WHETHER THE RESULTS OF POOR WORKMANSHIP, USE OF DEFECTIVE MATERIAL, DAMAGE THROUGH CARELESSNESS OR ANY OTHER CAUSE, FOUND TO EXIST PRIOR TO THE FINAL ACCEPTANCE OF THE WORK, SHALL BE REMOVED AND REPLACED IN AN ACCEPTABLE MANNER, AT THE CONTRACTOR'S EXPENSE. WORK DONE BEYOND THE LINES SHOWN ON THE PLANS OR ANY EXTRA WORK DONE WITHOUT AUTHORITY WILL NOT BE PAID FOR.
15. THE PROPERTY LINE SHALL BE CONSIDERED THE CONSTRUCTION/PROJECT LIMITS LINE, WITH EXCEPTION TO ADDITIONAL AREAS SHOWN ON THIS DRAWING.
16. DO WORK AT TIMES APPROVED BY OWNER.
17. CONTRACTOR TO TRANSPORT EXCESS EARTH MATERIALS OFF–SITE.
18. CONTRACTOR TO SECURE HIS OWN STAGING AND EQUIPMENT/MATERIAL STORAGE AREA.
19. THE CONTRACTOR SHALL ADHERE TO THE PROVISIONS OF THE SENATE BILL NUMBER 583, 78TH GENERAL ASSEMBLY OF THE STATE OF MISSOURI. THE BILL REQUIRES THAT ANY PERSON OR FIRM DOING EXCAVATION ON PUBLIC RIGHTS–OF–WAY DO SO ONLY AFTER GIVING NOTICE TO, AND OBTAINING INFORMATION FROM, UTILITY COMPANIES. STATE LAW REQUIRED 72 HOURS ADVANCED NOTICE

UTILITIES

ELECTRIC:

WATER & SEWER:

TELEPHONE:

GAS:

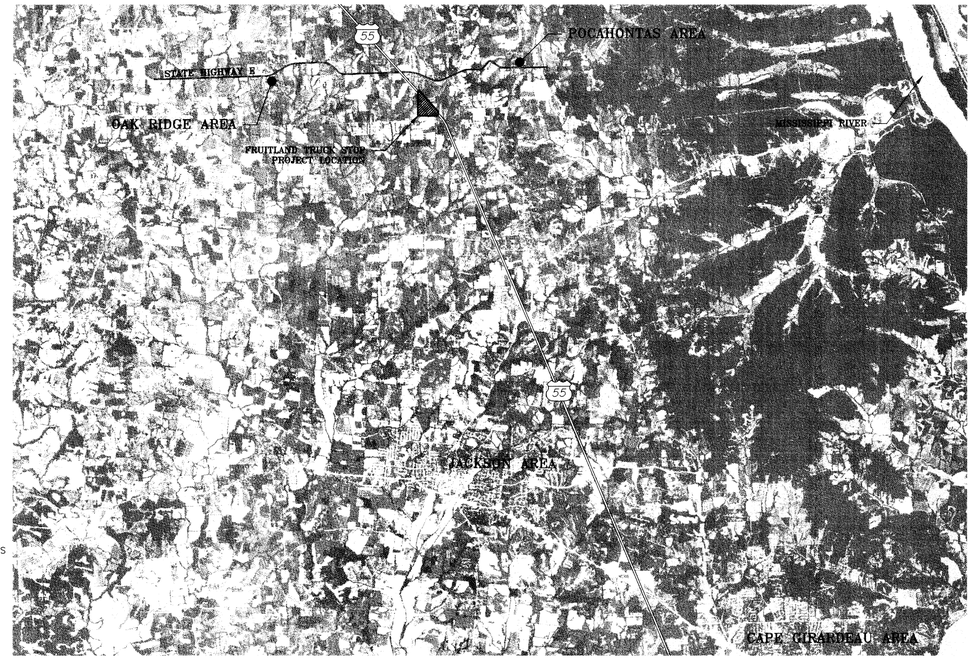

LOCATION MAP

NOT TO SCALE

NORTH

SYMBOLS LEGEND:

T	= UNDERGROUND TELEPHONE LINE
R/W	= PROPOSED RIGHT–OF–WAY LINE
R/W	= EXISTING RIGHT–OF–WAY LINE
P	= UNDERGROUND POWER
OHP	= ABOVE GROUND POWER
SAN	= SANITARY SEWER LINE
STR	= STORM SEWER LINE –or– PIPE
W	= WATER LINE
G	= GAS LINE
	= DITCH FLOW LINE
	= FENCE LINE
	= RAIL ROAD TRACKS
AC	= AIR CONDITIONER
	= CONIFEROUS TREE
	= FENCE POST
	= GATE POST
GA	= GUY ANCHOR
H&V	= HORIZONTAL & VERTICAL CONTROL POINT
LP	= LIGHT POLE
MS	= METAL SIGN
PP	= POLE NO WIRES
PPED	= POWER PEDESTAL
PP	= POWER POLE
RW	= R/W MARKER
SSMH	= SANITARY SEWER MANHOLE
SCRIBE	= SCRIBE
SCO	= SEWER CLEAN OUT
STMH	= STORM MANHOLE
TBM	= TEMP BENCHMARK
	= TREE
WFCT	= WATER FAUCET

INDEX OF SHEETS

SHEET NUMBER	SHEET TITLE
C001	COVER SHEET
C100	OVERALL EXISTING CONDITION PLAN
C101	DEMOLITION AND CONSTRUCTION PLAN
C102	LAGOON NO. 3 CROSS SECTION
C103	AERATOR PLAN
C104	SAND FILTER PIPING PLAN
C105	LIFT STATION PLAN
C500	AERATOR DETAILS
C501	MISC DETAILS
C502	VAULT DETAILS
C503	EROSION CONTROL PLAN
E1	CONTROL PANEL DETAILS
E2	VAULT ELECTRICAL DETAILS

ABBREVIATIONS:

AC	AIR CONDITIONER
BSKB	IN–PLACE –or– MOVABLE BASKETBALL GOAL
CMP	CORRUGATED METAL PIPE
CONC	CONCRETE
CP#	SURVEY CONTROL POINT (NUMBER)
EXIST	EXISTING
FH	FIRE HYDRANT
GA	GUY ANCHOR
GIR	NATURAL GAS INSTRUMENT RISER
GM	GAS METER
GRVL	GRAVEL
GTPST	GATE POST
GV	NATURAL GAS VALVE
GVMKR	GRAVE MARKER
MB	MAIL BOX
MS	METAL SIGN
PP	POWER POLE
PRISER	POWER RISER
RCP	REINFORCED CONCRETE PIPE
SCO	SEWER CLEAN OUT
STMH	STORM SEWER MANHOLE
TBM	TEMPORARY BENCHMARK
TC	TOP OF CONCRETE
TEP	TELEPHONE PEDESTAL
TP	TELEPHONE POLE –or– TOP OF PAVEMENT
TYP	TYPICAL
U.N.O.	UNLESS NOTED OTHERWISE
WFCT	WATER FAUCET
WM	WATER METER
WP	WOOD FENCE POST
YDLT	YARD LIGHT

IN KANSAS

UTILITIES ONE CALL SYSTEMS
CALL BEFORE YOU DIG

IN MISSOURI

1–800–344–7233 DIG–SAFE

1–800–344–7483 DIG–RITE

811

Know what's **below.**
Call before you dig.

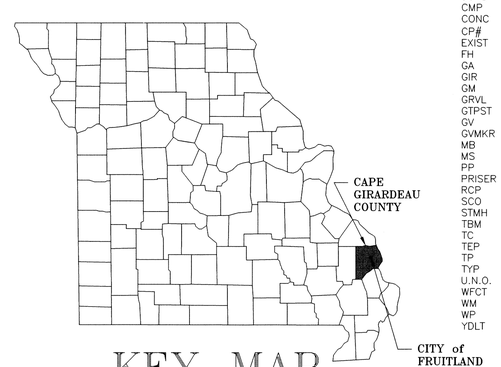

KEY MAP

NO.	DATE	REVISIONS	BY	APP'D
1				
2				
3				
4				
5				

Designed By: DES
Drawn By: JMB
Checked By: DES
Issue Date: _____

COPYRIGHT © – 2012 – SHAFER, KLINE & WARREN INC.
MISSOURI CERTIFICATE OF AUTHORITY: F0013985O

SHAFER, KLINE & WARREN, INC.
3200 Penn Terrace, Suite 100, Columbia, MO 65202
573/442–4537 FAX: 573/442–4543

OFFICE LOCATIONS:
Chillicothe, MO
Columbia, MO
Houston, TX
Iola, KS
Kansas City, MO
Lenexa, KS
Macon, MO
North Kansas City, MO
Tulsa, OK

CIVIL ENGINEERS ELECTRICAL ENGINEERS MECHANICAL ENGINEERS STRUCTURAL ENGINEERS LANDSCAPE ARCHITECTS LAND SURVEYORS LAND PLANNERS

REST AREA SEWER SYSTEM IMPROVEMENTS
CAPE GIRARDEAU, FRUITLAND, MISSOURI

COVER SHEET

110535–010

SHEET NO.
C001

L:\110535-010_CAD\CIVIL\110535-010 - C - TITLE.DWG
LAYOUT: C001 | BY: JRGICELSBERGER | DATE: 5/18/2012
XREF DWG1: NONE | XREF DWG2: NONE
XREF DWG3: NONE | XREF DWG4: NONE

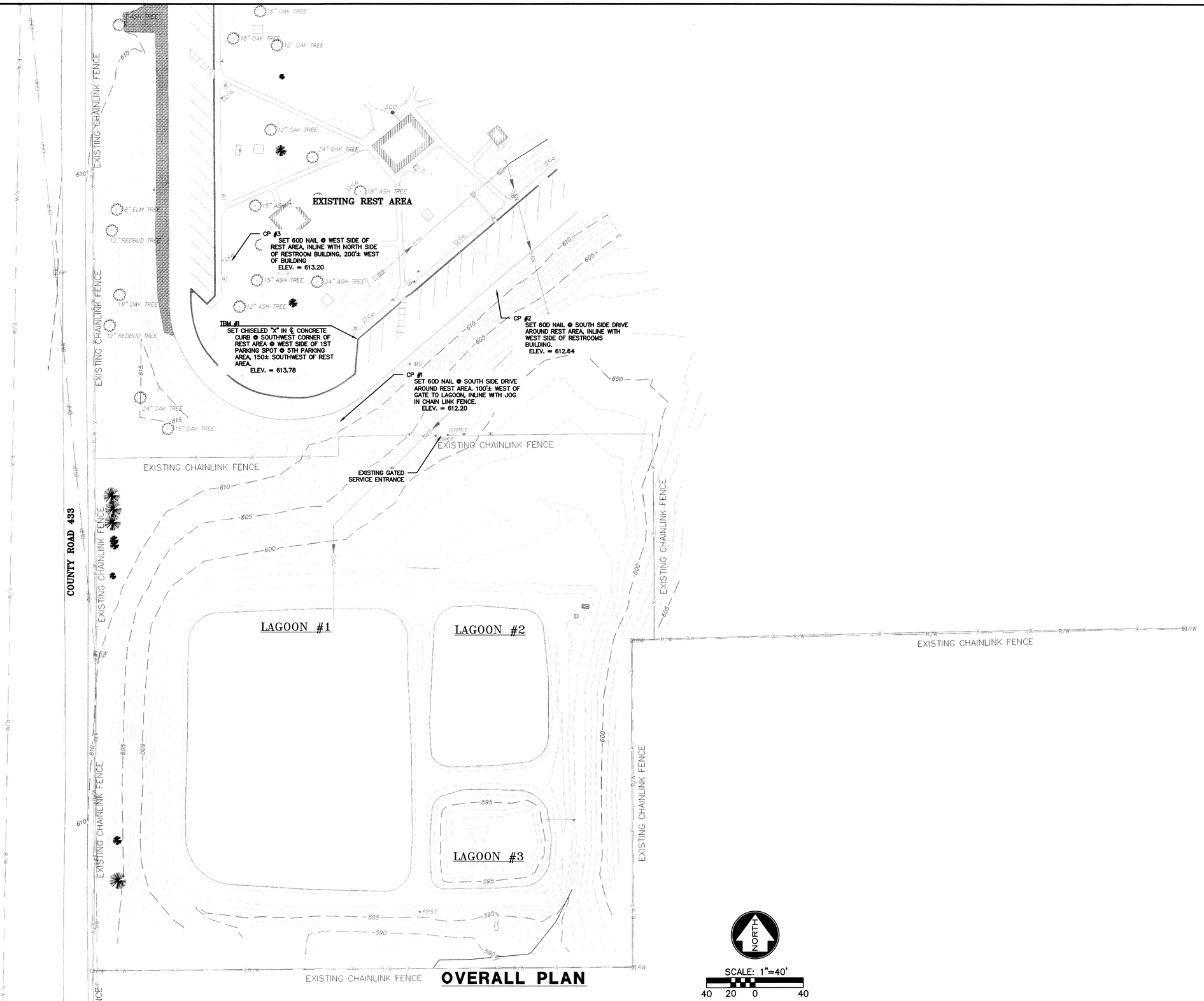

OVERALL PLAN

L:\110535-010_CAD\CIVIL\110535-010 - C - SAN - 1.DWG
LAYOUT: C100 | BY: JBRYAN | DATE: 2/14/2012
XREF DWG1: NONE | XREF DWG2: NONE
XREF DWG3: NONE | XREF DWG4: NONE

NO.	DATE	REVISIONS	BY	APP'D
1				
2				
3				
4				
5				

Designed By: DES
Drawn By: JMB
Checked By: DES
Issue Date: ____

COPYRIGHT © - 2012 - SHAFER, KLINE & WARREN INC.
MISSOURI CERTIFICATE OF AUTHORITY: F0013985O

SHAFER, KLINE & WARREN, INC.
3200 Penn Terrace, Suite 100, Columbia, MO 65202
573/442-4537 FAX: 573/442-4543
OFFICE LOCATIONS:
Chillicothe, MO
Columbia, MO
Houston, TX
Iola, KS
Kansas City, MO
Lenexa, KS
Macon, MO
North Kansas City, MO
Tulsa, OK
CIVIL ENGINEERS ELECTRICAL ENGINEERS MECHANICAL ENGINEERS STRUCTURAL ENGINEERS LANDSCAPE ARCHITECTS LAND SURVEYORS LAND PLANNERS

REST AREA SEWER SYSTEM IMPROVEMENTS
CAPE GIRARDEAU, FRUITLAND, MISSOURI

OVERALL EXISTING CONDITIONS PLAN

110535-010
SHEET NO.
C100

COUNTY ROAD 45

EXISTING CHAINLINK FENCE

8" VCP PIPE

SANITARY MANHOLE
TOP ELEVATION=602.73
S.(8" STL)=597.16
NE.(8" VCP)=NO DATA

8" STL. PIPE

8" STEEL PIPE

15" CMP PIPE

STR

4" WIDE CONC. WALL ABANDON METER PIT

4" WIDE CONC. WALL PIT

8" STL. PIPE

METAL SIGN OUTFALL

LAGOON #1

TOP OF BERM ELEV	= 598.78'
WATER SURFACE	= 596.80'
AREA	= 0.96 ACRES
FLOOR ELEV	= NO DATA
APPROX. SLUDGE DEPTH	= NO DATA

LAGOON #2

TOP OF BERM ELEV	= 598.77'
WATER SURFACE	= 596.96'
AREA	= 0.28 ACRES
FLOOR ELEV	= NO DATA
APPROX. SLUDGE DEPTH	= NO DATA

LAGOON #3

TOP OF BERM ELEV	= 598.88'
WATER SURFACE	= 596.76'
AREA	= 0.17 ACRES
TOP OF SLUDGE ELEV	= 594.24'
FLOOR ELEV	= 592.82'
APPROX. SLUDGE DEPTH	= 1.42'

CONTRACTOR TO LOCATE EXISTING LAGOON #2 OUTFLOW PIPE AND INSTALL NEW GATE VALVE SEE SHEET C104 FOR DETAIL

EXISTING OUTFALL SIGN TO BE REMOVED AND REPLACED AT NEW OUTFALL LOCATION SEE SHT C104 FOR DETAILS

EXISTING DRAINAGE PIPE TO BE DEMO FOR NEW LAGOON DRAIN OFF SYSTEM SEE SHT C104 FOR DETAILS

EXISTING CHAINLINK FENCE

OVERALL PLAN

NORTH

SCALE: 1"=20'

20 10 0 20

NO.	DATE	REVISIONS	BY	APPD
5				
4				
3				
2				
1				

Designed By: DES
Drawn By: JMB
Checked By: DES
Issue Date: _____

COPYRIGHT © - 2012 - SHAFER, KLINE & WARREN INC.
MISSOURI CERTIFICATE OF AUTHORITY: F00139850

SHAFER, KLINE & WARREN, INC.
3200 Penn Terrace, Suite 100, Columbia, MO 65202
573/442-4537 FAX: 573/442-4543

OFFICE LOCATIONS:
Chillicothe, MO
Columbia, MO
Houston, TX
Iola, KS
Kansas City, MO
Lenexa, KS
Macon, MO
North Kansas City, MO
Tulsa, OK

CIVIL ENGINEERS ELECTRICAL ENGINEERS MECHANICAL ENGINEERS STRUCTURAL ENGINEERS LANDSCAPE ARCHITECTS LAND SURVEYORS LAND PLANNERS

REST AREA SEWER SYSTEM IMPROVEMENTS
CAPE GIRARDEAU, FRUITLAND, MISSOURI

LAGOON IMPROVEMENTS
DEMOLITION AND CONSTRUCTION PLAN

110535-010

SHEET NO.
C101

L:\110535-010_CAD\CIVIL\110535-010 - C - SAN - 2.DWG
LAYOUT: C101 | BY: JREIGELSBERGER | DATE: 5/14/2012
XREF DWG1: NONE | XREF DWG2: NONE
XREF DWG3: NONE | XREF DWG4: NONE

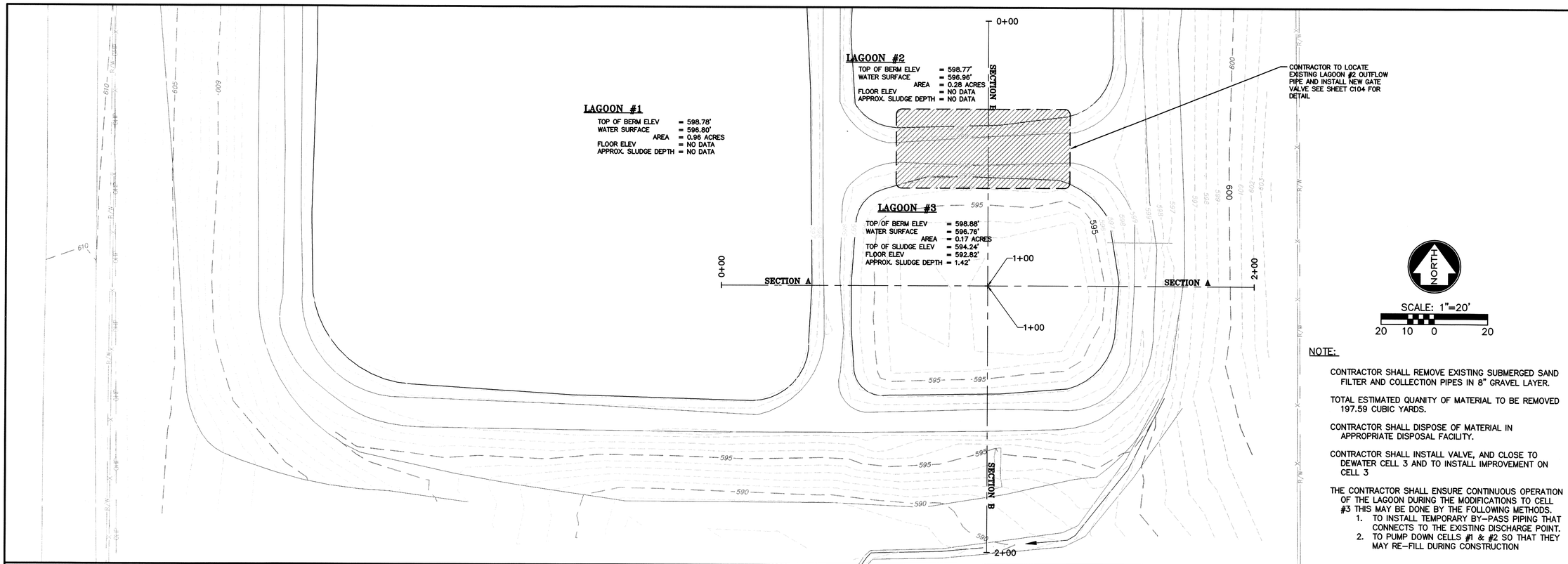

NOTE:

CONTRACTOR SHALL REMOVE EXISTING SUBMERGED SAND FILTER AND COLLECTION PIPES IN 8" GRAVEL LAYER.

TOTAL ESTIMATED QUANITY OF MATERIAL TO BE REMOVED 197.59 CUBIC YARDS.

CONTRACTOR SHALL DISPOSE OF MATERIAL IN APPROPRIATE DISPOSAL FACILITY.

CONTRACTOR SHALL INSTALL VALVE, AND CLOSE TO DEWATER CELL 3 AND TO INSTALL IMPROVEMENT ON CELL 3

THE CONTRACTOR SHALL ENSURE CONTINUOUS OPERATION OF THE LAGOON DURING THE MODIFICATIONS TO CELL #3 THIS MAY BE DONE BY THE FOLLOWING METHODS.

1. TO INSTALL TEMPORARY BY-PASS PIPING THAT CONNECTS TO THE EXISTING DISCHARGE POINT.
2. TO PUMP DOWN CELLS #1 & #2 SO THAT THEY MAY RE-FILL DURING CONSTRUCTION

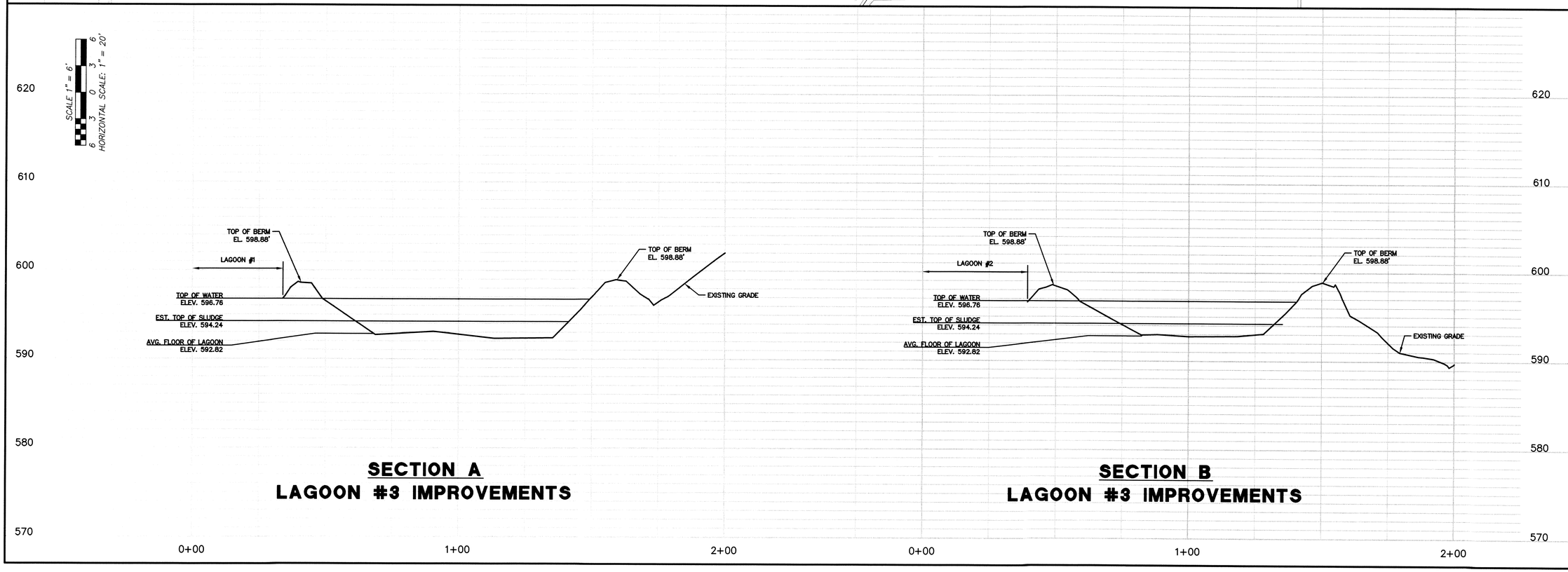

SECTION A
LAGOON #3 IMPROVEMENTS

SECTION B
LAGOON #3 IMPROVEMENTS

NO.	DATE	REVISIONS	BY	APP'D
1				
2				
3				
4				
5				

Designed By: DES
Drawn By: MB
Checked By: DES
Issue Date: _____

STATE OF MISSOURI DESIGNED PROFESSIONAL ENGINEER DENISE ESTHER EDWARDS E-27583 5/18/12

COPYRIGHT © - 2012 - SHAFER, KLINE & WARREN INC.
MISSOURI CERTIFICATE OF AUTHORITY: F00139850

SHAFER, KLINE & WARREN, INC.
3200 Penn Terrace, Suite 100, Columbia, MO 65202
573/442-4537 FAX: 573/442-4543
OFFICE LOCATIONS:
Chillicothe, MO
Columbia, MO
Houston, TX
Iola, KS
Kansas City, MO
Lenexa, KS
Macon, MO
North Kansas City, MO
Tulsa, OK
CIVIL ENGINEERS ELECTRICAL ENGINEERS MECHANICAL ENGINEERS STRUCTURAL ENGINEERS LANDSCAPE ARCHITECTS LAND SURVEYORS LAND PLANNERS

REST AREA SEWER SYSTEM IMPROVEMENTS
CAPE GIRARDEAU, FRUITLAND, MISSOURI

LAGOON IMPROVEMENTS
LAGOON #3 CROSS SECTIONS

110535-010
SHEET NO.
C102

L:\110535-010_CAD\CIVIL\110535-010 - C - SAN - 2.DWG
LAYOUT: C102
XREF DWG1: NONE
XREF DWG3: NONE
BY: JREIGELSBERGER
DATE: 5/14/2012
XREF DWG2: NONE
XREF DWG4: NONE

(TYP 6 PLACES)
INSTALL 3"ø GALVANIZED MOORING POSTS 1.0' INSIDE TOP OF BERM (SEE DETAIL ON C500)

(TYP 6 PLACES)
INSTALL 2 HP AERATOR, 275 SERIES AIRE-.2 AND FLOAT ASSEMBLY, OR EQUAL ISTALL 3' x 6 1/8' x 3/16" STEEL PLATE ON LAGOON FLOOR CENTERED ON AERATOR TO PREVENT EROSION (SEE DETAIL ON C500)

(TYP 3 PLACES)
INSTALL 3/16" SS MOORING CABLE, SEE DETAILS FOR CONNECTIONS TO FLOAT AND POST ON SHEET C500)

57.08'
70.00'
57.43'

54.98' | 62.50' | 62.50' | 52.50'

LAGOON #1

TOP OF BERM ELEV = 598.78'
WATER SURFACE = 596.80'
AREA = 0.96 ACRES
FLOOR ELEV = NO DATA
APPROX. SLUDGE DEPTH = NO DATA

LAGOON #2

TOP OF BERM ELEV = 598.77'
WATER SURFACE = 596.96'
AREA = 0.28 ACRES
FLOOR ELEV = NO DATA
APPROX. SLUDGE DEPTH = NO DATA

LAGOON #3

TOP OF BERM ELEV = 598.88'
WATER SURFACE = 596.76'
AREA = 0.17 ACRES
TOP OF SLUDGE ELEV = 594.24'
FLOOR ELEV = 592.82'
APPROX. SLUDGE DEPTH = 1.42'

CP #1
ELEV. = 612.20

NORTH

SCALE: 1"= 8'
8 4 0 8

L:\110535-010_CAD\CIVIL\110535-010 - C - SAN - 2.DWG
LAYOUT: C103 | BY: JREIGELSBERGER | DATE: 5/14/2012
XREF DWG1: NONE | XREF DWG2: NONE
XREF DWG3: NONE | XREF DWG4: NONE

NO.	DATE	REVISIONS	BY	APP'D
5				
4				
3				
2				
1				

Designed By: DES
Drawn By: JMB
Checked By: DES
Issue Date:

COPYRIGHT © - 2012 - SHAFER, KLINE & WARREN INC.
MISSOURI CERTIFICATE OF AUTHORITY: F001398SO

SHAFER, KLINE & WARREN, INC.
3200 Penn Terrace, Suite 100, Columbia, MO 65202
573/442-4537 FAX: 573/442-4543
OFFICE LOCATIONS: Chillicothe, MO; Columbia, MO; Houston, TX; Iola, KS; Kansas City, MO; Lenexa, KS; Macon, MO; North Kansas City, MO; Tulsa, OK
CIVIL ENGINEERS ELECTRICAL ENGINEERS MECHANICAL ENGINEERS STRUCTURAL ENGINEERS LANDSCAPE ARCHITECTS LAND SURVEYORS LAND PLANNERS

REST AREA SEWER SYSTEM IMPROVEMENTS
CAPE GIRARDEAU, FRUITLAND, MISSOURI

LAGOON IMPROVEMENTS
AERATOR PLAN

110535-010

SHEET NO.
C103

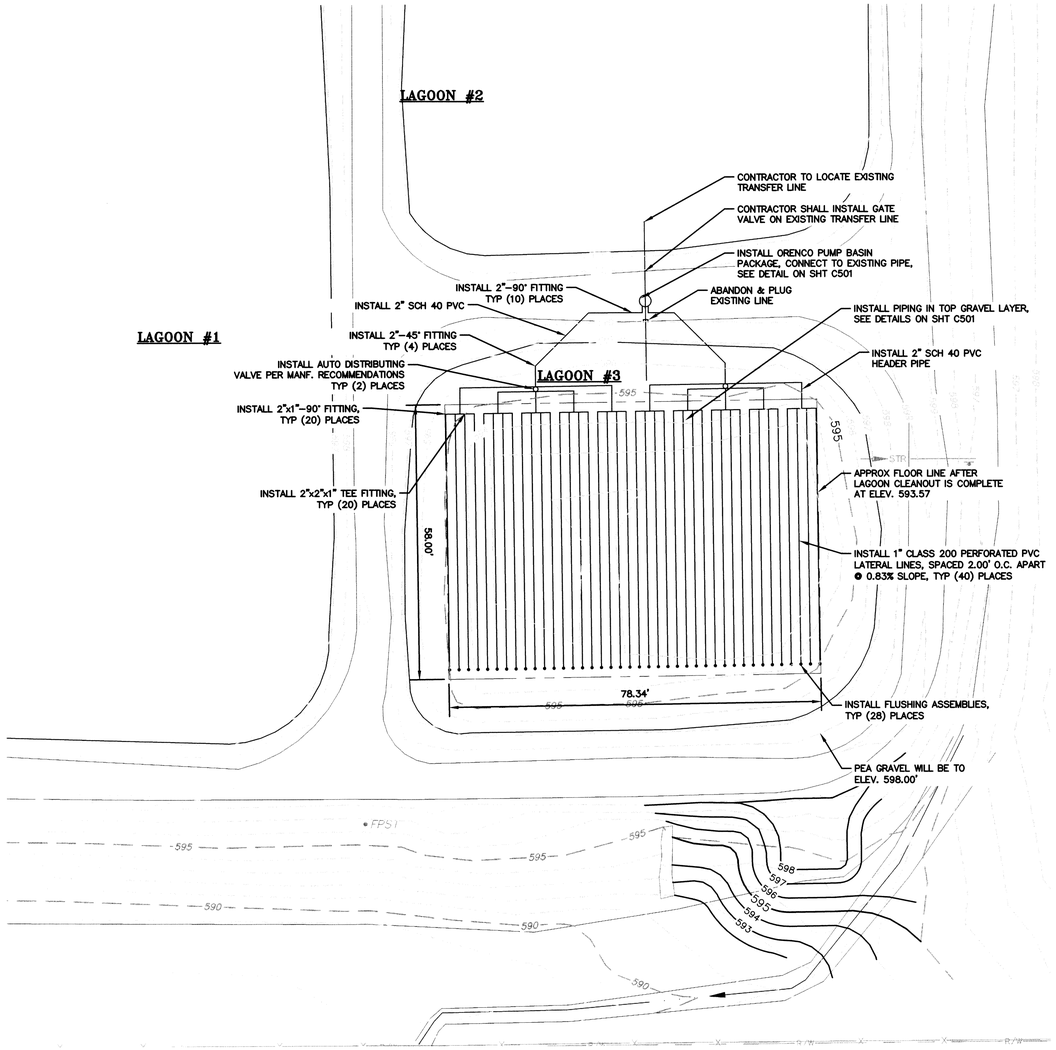

DISTRIBUTION PIPING PLAN

NOTES:

1. SEE SHT C501 AND C502 FOR DETAILS.
2. NEW DISTRIBUTION LATERALS SHALL BE ORENCO MODEL LP-150-24 OR APPROVED EQUAL. IT SHALL BE 1" PRE-DRILLED CLASS 200 PIPE WITH $\frac{3}{8}$" ORIFICES ON 24" CENTERS, WITH A COUPLING ON ONE END.
3. EACH ORIFICE SHALL BE COVERED WITH A STANDARD ORENCO (OR APPROVED EQUAL) ORIFICE SHIELD.
4. A FLUSHING ASSEMBLY SHALL BE PROVIDED AT THE END OF EACH DISTRIBUTION LATERAL. THE FLUSHING ASSEMBLY SHALL BE ORENCO MODEL SE-K-075-V OR APPROVED EQUAL. FLUSHING ASSEMBLY SHALL INCLUDE A VALVE BOX ENCLOSURE AND BALL VALVE.
5. ALL ORIFICES MUST BE INSTALLED IN THE UP ORIENTATION, WITH THE EXCEPTION OF EVERY FIFTH ORFICE. IT SHALL BE IN THE DOWNWARD ORIENTATION.
6. ALL FITTINGS SHALL BE SCH 80.

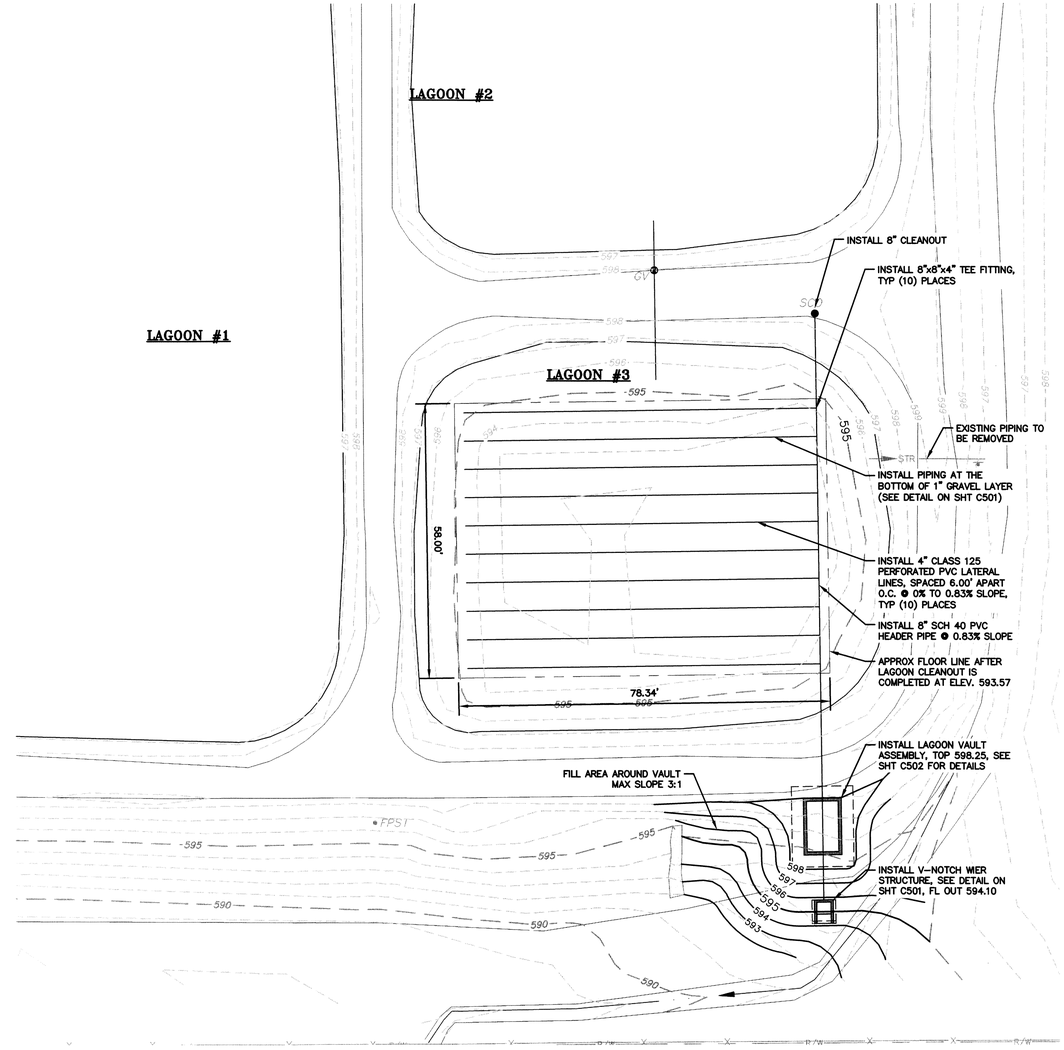

COLLECTION PIPING PLAN

NOTES:

1. SEE SHT C501 AND C502 FOR DETAILS.
2. THE SAND FILTER COLLECTION LATERALS (DRAINS) SHALL BE ORENCO MODEL SFCD OR APPROVED EQUAL. COLLECTION PIPE SHALL BE 4" CLASS 125 PVC WITH $\frac{1}{4}$" SLOTS, 4" ON CENTER. 4" COLLECTION DRAIN CAPS SHALL BE PROVIDED ON THE WESTERLY END OF EACH PIPE (END NOT CONNECTED TO THE HEADER).
3. ALL FITTINGS SHALL BE SCH 80.

NO.	DATE	REVISIONS	BY	APP'D
1	4-30-12	QUANTITIES	JMR	DES
2				
3				
4				
5				

COPYRIGHT © - 2012 - SHAFER, KLINE & WARREN INC.

MISSOURI CERTIFICATE OF AUTHORITY: F00139850

Designed By: DES
Drawn By: JMB
Checked By: DES
Issue Date: _____

STATE OF MISSOURI DENNIS E. SMITH NUMBER E-20089 REGISTERED PROFESSIONAL ENGINEER

SHAFER, KLINE & WARREN, INC.
3200 Penn Terrace, Suite 100, Columbia, MO 65202
573/442-4537 FAX: 573/442-4543

OFFICE LOCATIONS:
Chillicothe, MO
Columbia, MO
Houston, TX
Iola, KS
Kansas City, MO
Lenexa, KS

Macon, MO
North Kansas City, MO
Tulsa, OK

CIVIL ENGINEERS ELECTRICAL ENGINEERS MECHANICAL ENGINEERS STRUCTURAL ENGINEERS LANDSCAPE ARCHITECTS LAND SURVEYORS LAND PLANNERS

REST AREA SEWER SYSTEM IMPROVEMENTS
CAPE GIRARDEAU, FRUITLAND, MISSOURI

LAGOON IMPROVEMENTS
SAND FILTER PIPING PLAN

110535-010

SHEET NO.
C104

L:\110535-010_CAD\CIVIL\110535-010 - C - SAN - 2.DWG
LAYOUT: C104 | BY: JREIGELSBERGER | DATE: 5/14/2012
XREF DWG1: NONE | XREF DWG2: NONE
XREF DWG3: NONE | XREF DWG4: NONE

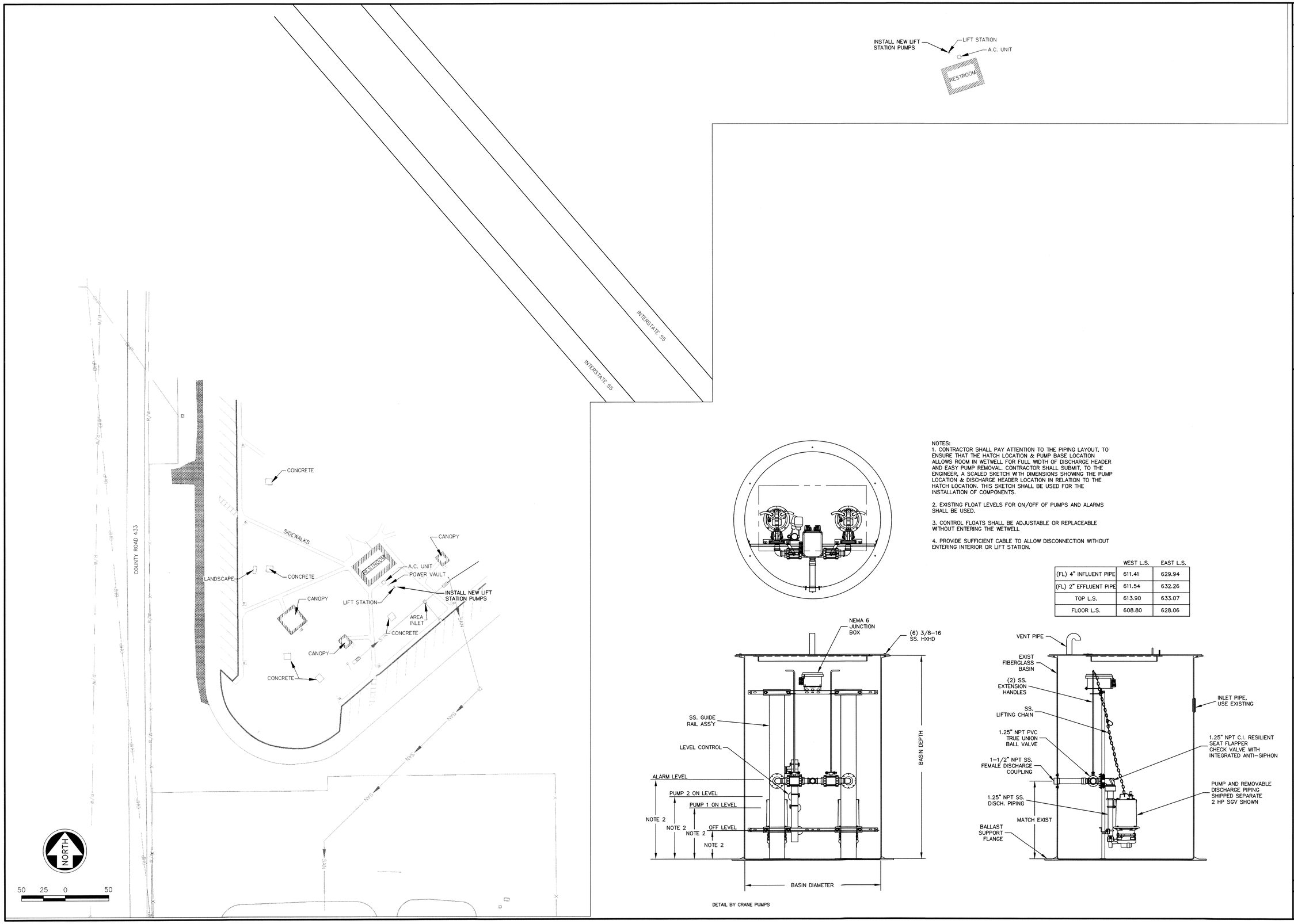

	WEST L.S.	EAST L.S.
(FL) 4" INFLUENT PIPE	611.41	629.94
(FL) 2" EFFLUENT PIPE	611.54	632.26
TOP L.S.	613.90	633.07
FLOOR L.S.	608.80	628.06

L:\110535-010_CAD\CIVIL\110535 - LIFT STATIONS.DWG
LAYOUT: LS SITE | BY: JREIGELSBERGER | DATE: 5/18/2012
XREF DWG1: NONE | XREF DWG2: NONE
XREF DWG3: NONE | XREF DWG4: NONE

NO.	DATE	REVISIONS	BY	APP'D
1				
2				
3				
4				
5				

Designed By: PW
Drawn By: JWR
Checked By: PW
Issue Date: 5/18/12

COPYRIGHT © - 2012 - SHAFER, KLINE & WARREN INC.
MISSOURI CERTIFICATE OF AUTHORITY: F00139850

SHAFER, KLINE & WARREN, INC.
3200 Penn Terrace, Suite 100, Columbia, MO 65202
573/442-4537 FAX: 573/442-4543
OFFICE LOCATIONS:
Chillicothe, MO
Columbia, MO
Houston, TX
Iola, KS
Kansas City, MO
Lenexa, KS
Macon, MO
North Kansas City, MO
Tulsa, OK
CIVIL ENGINEERS ELECTRICAL ENGINEERS MECHANICAL ENGINEERS STRUCTURAL ENGINEERS LANDSCAPE ARCHITECTS LAND SURVEYORS LAND PLANNERS

REST AREA SEWER SYSTEM IMPROVEMENTS
CAPE GIRARDEAU, FRUITLAND, MISSOURI

LIFT STATION SITE PLAN

110535-010

SHEET NO.
C105

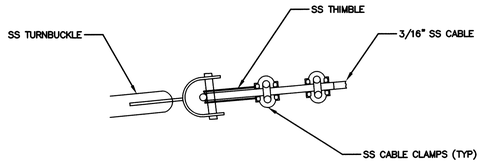

CABLE END ASSEMBLY DETAIL

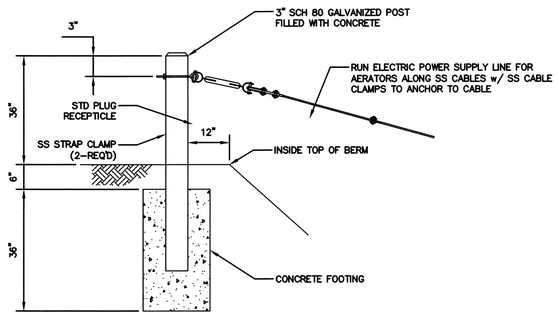

MOORING POST DETAIL

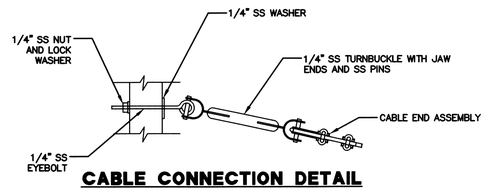

CABLE CONNECTION DETAIL

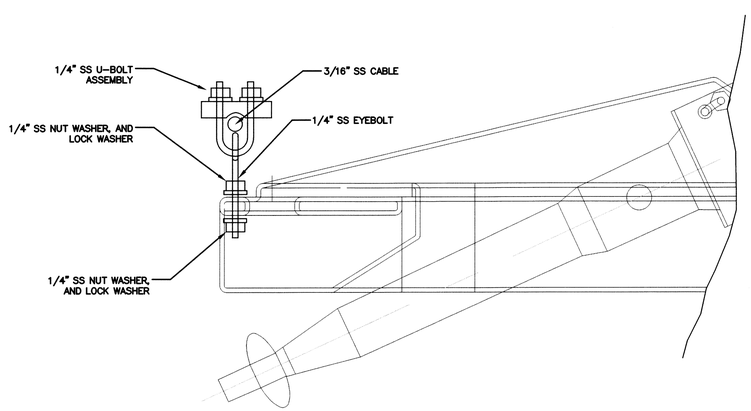

CABLE CONNECTION FLOAT DETAIL

L:\110535-010_CAD\CIVIL\110535-010 - C - DET - 00.DWG
LAYOUT: C500 | BY: JREIGELSBERGER | DATE: 5/18/2012
XREF DWG1: NONE | XREF DWG2: NONE
XREF DWG3: NONE | XREF DWG4: NONE

NO.	DATE	REVISIONS	BY	APP'D
1				
2				
3				
4				
5				

Designed By: DES
Drawn By: JMB
Checked By: DES
Issue Date: _____

COPYRIGHT © - 2012 - SHAFER, KLINE & WARREN INC.
MISSOURI CERTIFICATE OF AUTHORITY: F00139850

SHAFER, KLINE & WARREN, INC.
3200 Penn Terrace, Suite 100, Columbia, MO 65202
573/442-4537 FAX: 573/442-4543
OFFICE LOCATIONS:
Chillicothe, MO
Columbia, MO
Houston, TX
Iola, KS
Kansas City, MO
Lenexa, KS
Macon, MO
North Kansas City, MO
Tulsa, OK
CIVIL ENGINEERS ELECTRICAL ENGINEERS MECHANICAL ENGINEERS STRUCTURAL ENGINEERS LANDSCAPE ARCHITECTS LAND SURVEYORS LAND PLANNERS

REST AREA SEWER SYSTEM IMPROVEMENTS
CAPE GIRARDEAU, FRUITLAND, MISSOURI

LAGOON IMPROVEMENTS
AERATOR DETAILS

110535-010

SHEET NO.
C500

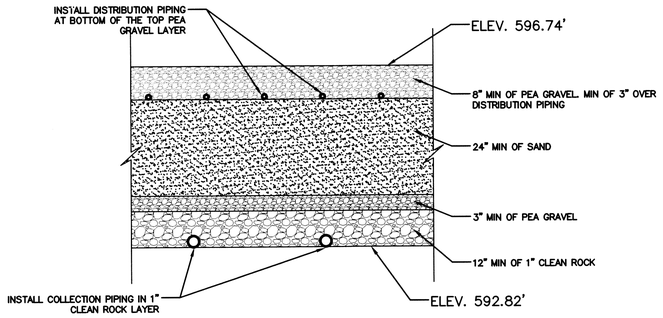

SEE SHEET 6 FOR DISTRIBUTION AND COLLECTION PIPING SPECIFICATIONS

SAND FILTER SECTION DETAIL
NO SCALE

SAND FILTER SPECS:
ROCK SHALL BE 1" CLEAN ROCK PEA
GRAVEL SHALL BE 1/8–3/8" IN SIZE
SAND SHALL BE 1.2<0.3mm WITH
A UNIFORMITY COEFFICIENT <3.5mm AND
NO MORE THAN 1% SMALLER THAN
0.13mm
THE SAND SHALL HAVE AN EFFECTIVE
SIZE OF <1.2mm

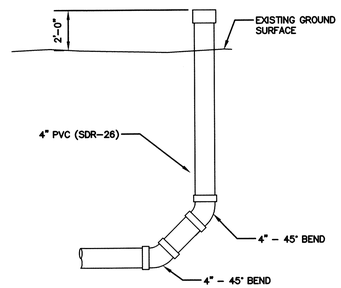

TYPICAL CLEAN OUT DETAILS
(GRAVITY SEWER)
NO SCALE

Component	MODEL
❶ Pump basin	PB3066+COV+20
❷ Fiberglass lid	FL30G
❸ Splice box	SB5
❹ Float switch assembly	SEE NOTE 5
❺ Discharge plumbing assembly	HV200Q
❻ Pump	PF500752
❼ Control panel	MVP–DAX2
❽ Biotube® pump vault	PVU572419

COMPONENT LOCATION

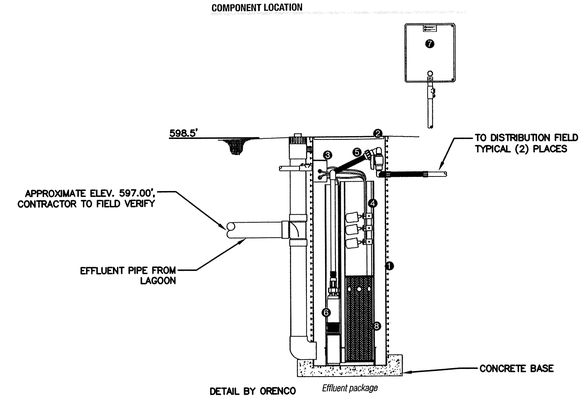

PUMP BASIN (DUPLEX)
NO SCALE

NOTES:
1. MIN TANK ACCESS DIAMETER: 19" (20" RECOMMENDED)

2. MIN RISER DIAMTER: 30"

3. CONCRETE BASE SHALL BE SIZED TO PREVENT FLOTATON WHEN PUMP BASIN IS EMPTY.

4. ALL PART NUMBERS SHOWN REFERENCE ORENCO PRODUCTS. SUTHERLIN, OR 97479; 1–800–348–9843 APPROVED EQUAL PRODUCTS SHALL BE ALLOWED.

5. FLOAT SWITCH ASSEMBLY SHALL BE SET ACCORDING TO THE FOLLOWING:

SWITCH	DEPTH	FUNCTION
LOW WATER	36"	PUMP OFF TIMER OFF
INLET INVERT	19"	TIMER ON PUMP ON HIGH FLOW TIMER OFF
HIGH WATER	16"	HIGH FLOW TIMER ON TIMER OFF

6. THE TIMER SHALL BE SET TO DOSE ONE ZONE OF THE SAND FILTER FOR (6) MINUTES. THE DOSE SHALL CONSIST OF:
PUMP ON FOR 1 MINUTE
PUMP OFF FOR 5 MINUTES
THE PUMPS SHALL ALTERNATE EACH DOSE.

7. THE HIGH FLOW TIMER SHALL BE SET TO DOSE ONE ZONE OF THE SAND FILTER FOR (6) MINUTES. THE (6) MINUTE DOSE SHALL CONSIST OF:
PUMP ON FOR 6 MINUTES
THE PUMPS SHALL ALTERNATE EACH DOSE.

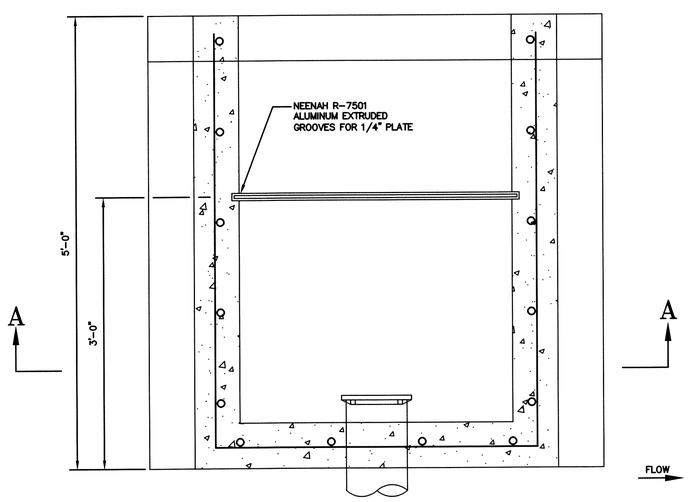

PLAN

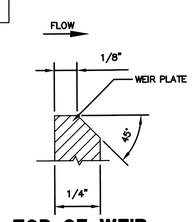

TOP OF WEIR

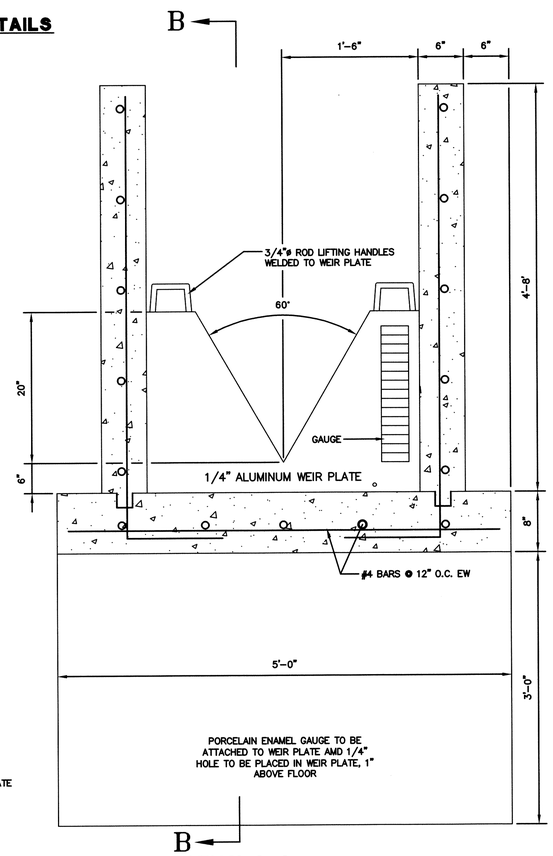

SECTION A-A

WEIR STRUCTURE

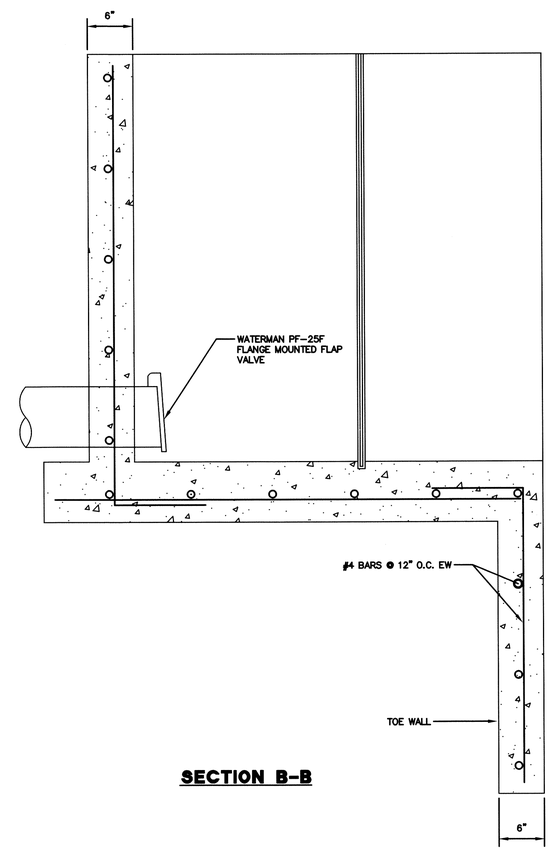

SECTION B-B

NO.	DATE	REVISIONS	BY	APPD
1	4-30-12	QUANTITIES	JWR	DES
2				
3				
4				
5				

COPYRIGHT © - 2012 - SHAFER, KLINE & WARREN INC.
MISSOURI CERTIFICATE OF AUTHORITY: F0013985

Designed By: DES
Drawn By: JMB
Checked By: DES
Issue Date: _____

STATE OF MISSOURI
DESMOND E. SCHMITZ
E-22033
REGISTERED PROFESSIONAL ENGINEER
5/18/12

SHAFER, KLINE & WARREN, INC.
3200 Penn Terrace, Suite 100, Columbia, MO 65202
573/442-4537 FAX: 573/442-4543
OFFICE LOCATIONS:
Chillicothe, MO
Columbia, MO
Houston, TX
Iola, KS
Kansas City, MO
Lenexa, KS
Macon, MO
North Kansas City, MO
Tulsa, OK
CIVIL ENGINEERS ELECTRICAL ENGINEERS MECHANICAL ENGINEERS STRUCTURAL ENGINEERS LANDSCAPE ARCHITECTS LAND SURVEYORS LAND PLANNERS

REST AREA SEWER SYSTEM IMPROVEMENTS
CAPE GIRARDEAU, FRUITLAND, MISSOURI

LAGOON IMPROVEMENTS
MISC. DETAILS

110535-010
SHEET NO.
C501

L:\110535-010_CAD\CIVIL\110535-010 - C - DET - 00.DWG
LAYOUT: C501 | BY: JREIGELSBERGER | DATE: 5/18/2012
XREF DWG1: NONE | XREF DWG2: NONE
XREF DWG3: NONE | XREF DWG4: NONE

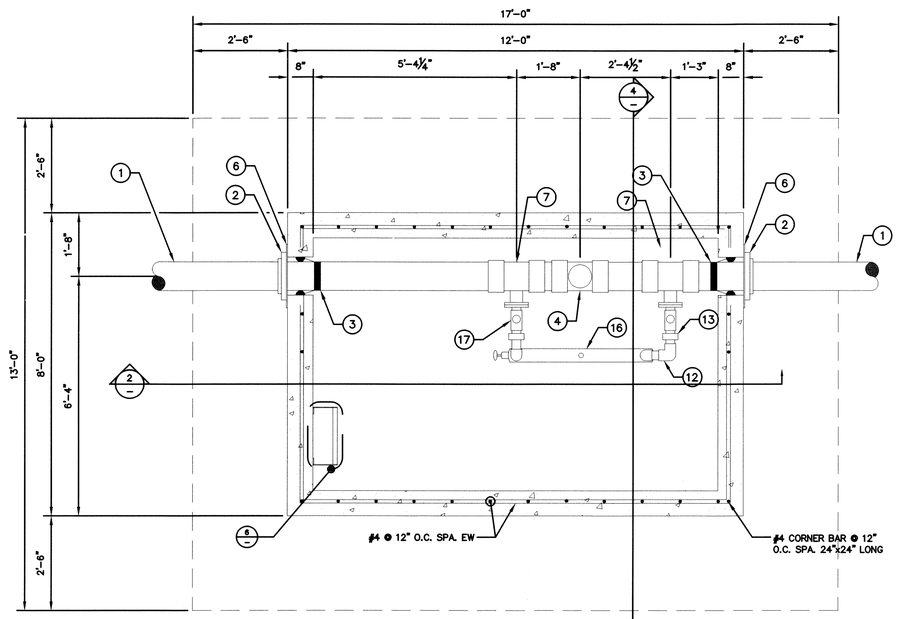

1 PIPING PLAN
NTS

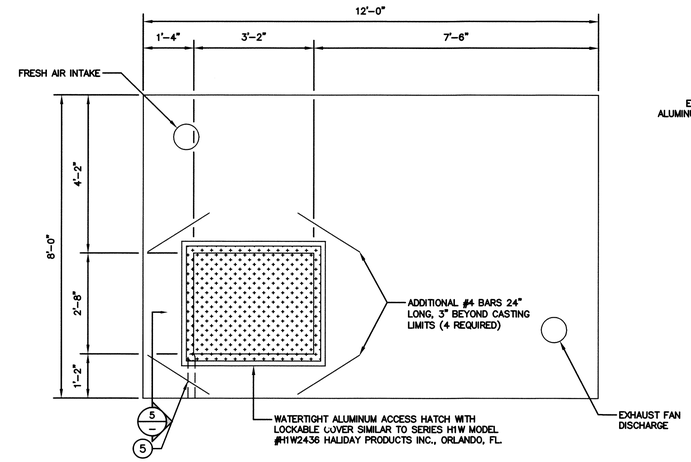

3 TOP SLAB PLAN
NTS

ACCESS LADDER NOTES:

1. LADDER SHALL BE ALL ALUMINUM WELDED CONSTRUCTION.
2. LADDER SHALL HAVE SLIP RESISTANT RIBBED RUNS DESIGN.
3. LADDER SHALL BE HOLIDAY PRODUCTS SERIES LIB LADDER.

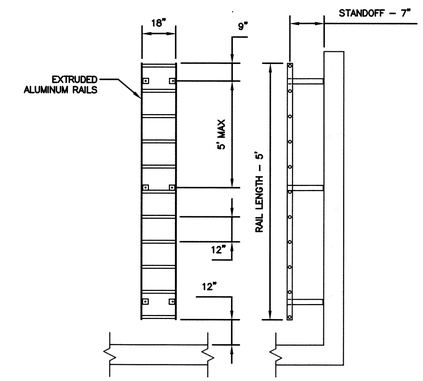

6 ACCESS LADDER DETAIL
NTS

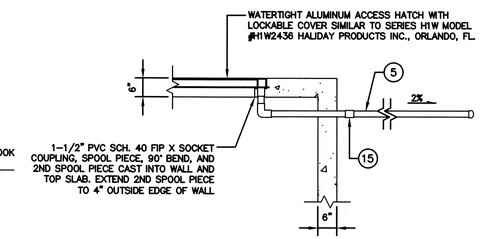

5 HATCH DRAIN PIPE
NTS

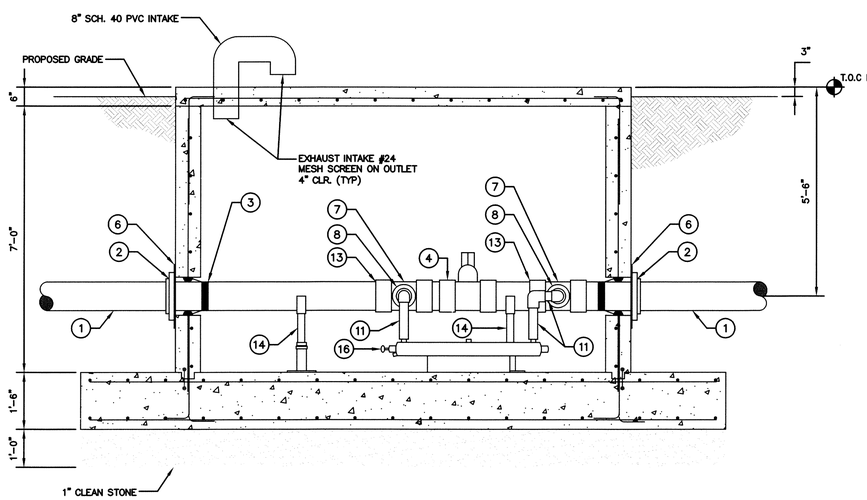

2 PIPING SECTION
NTS

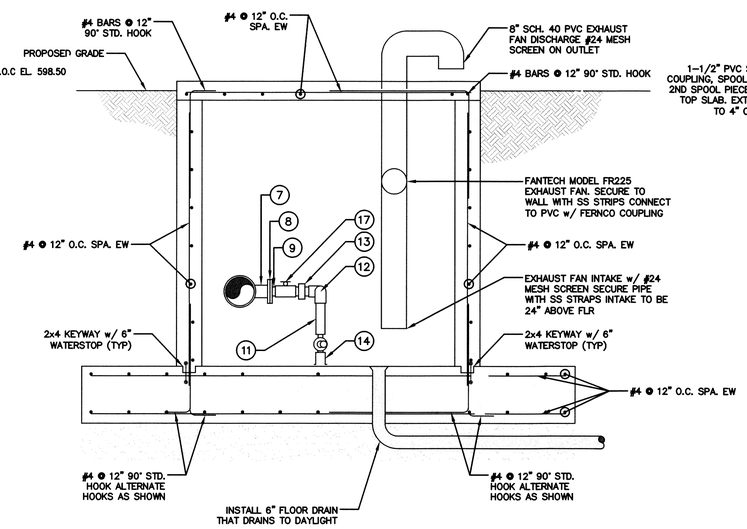

4 PIPING SECTION AND REINFORCING PLAN
NTS

PIPING SCHEDULE

NUMBER	DESCRIPTION
1	8" PVC – FLG. X P.E.
2	8" RETAINER GLAND (MEGA –LUG)
3	Z-LOK FLEXIBLE MANHOLE CONNECTOR
4	8" BALL VALVE WITH SOCKET ENDS FROM SPEARS MFG.
5	1-1/2" SCH. 80 PVC DRAIN PIPE
6	20" DIA. X 3/8" PLATE STEEL WASHER
7	8"X2" REDUCING TEE – FLG. X FLG.
8	3" FLANGE W/2" THRD. TAP
9	2"X1-1/4" SCH. 80 PVC TT BUSHING
10	1-1/4" SCH. 80 PVC MALE X SOCKET ADAPTER
11	1-1/4" SCH. 80 PVC PIPE
12	1-1/4" SCH. 80 PVC 90 DEG. BEND
13	1-1/4" SCH. 80 PVC UNION
14	ADJUSTABLE PIPE SUPPORT
15	1-1/2" SCH 80 UNION
16	UV CANISTER
17	1-1/4" FULL PORT PVC BALL VALVE

GENERAL NOTES

1. LAPPING OF WATERSTOPS SHALL NOT BE PERMITTED. WATERSTOPS BE BUTT WELDED.
2. CONCRETE PLACEMENTS ARE TO END AT CONSTRUCTION JOINTS.
3. WATERSTOPS ARE REQUIRED AT ALL CONSTRUCTION JOINT LOCATIONS.
4. FILL ALL CONSTRUCTION JOINTS WITH POLYURETHANE CAULK.
5. ALTERNATE POUR SEQUENCE SHALL BE APPROVED BY THE ENGINEER PRIOR TO CONSTRUCTION.

NO.	DATE	REVISIONS	BY	APP'D
1				
2				
3				
4				
5				

COPYRIGHT © - 2012 - SHAFER, KLINE & WARREN INC.
MISSOURI CERTIFICATE OF AUTHORITY: F0013985O

Designed By: DES
Drawn By: JMB
Checked By: DES
Issue Date: _____

SHAFER, KLINE & WARREN, INC.
3200 Penn Terrace, Suite 100, Columbia, MO 65202
573/442-4537 FAX: 573/442-4543
OFFICE LOCATIONS:
Chillicothe, MO
Columbia, MO
Houston, TX
Iola, KS
Kansas City, MO
Lenexa, KS
Macon, MO
North Kansas City, MO
Tulsa, OK
CIVIL ENGINEERS ELECTRICAL ENGINEERS MECHANICAL ENGINEERS STRUCTURAL ENGINEERS LANDSCAPE ARCHITECTS LAND SURVEYORS LAND PLANNERS

REST AREA SEWER SYSTEM IMPROVEMENTS
CAPE GIRARDEAU, FRUITLAND, MISSOURI

LAGOON IMPROVEMENTS
VAULT DETAILS

110535-010
SHEET NO.
C502

L:\110535-010_CAD\CIVIL\110535-010 - C - DET - 00.DWG
LAYOUT: C502 BY: JREIGELSBERGER DATE: 5/18/2012
XREF DWG1: NONE XREF DWG2: NONE
XREF DWG3: NONE XREF DWG4: NONE

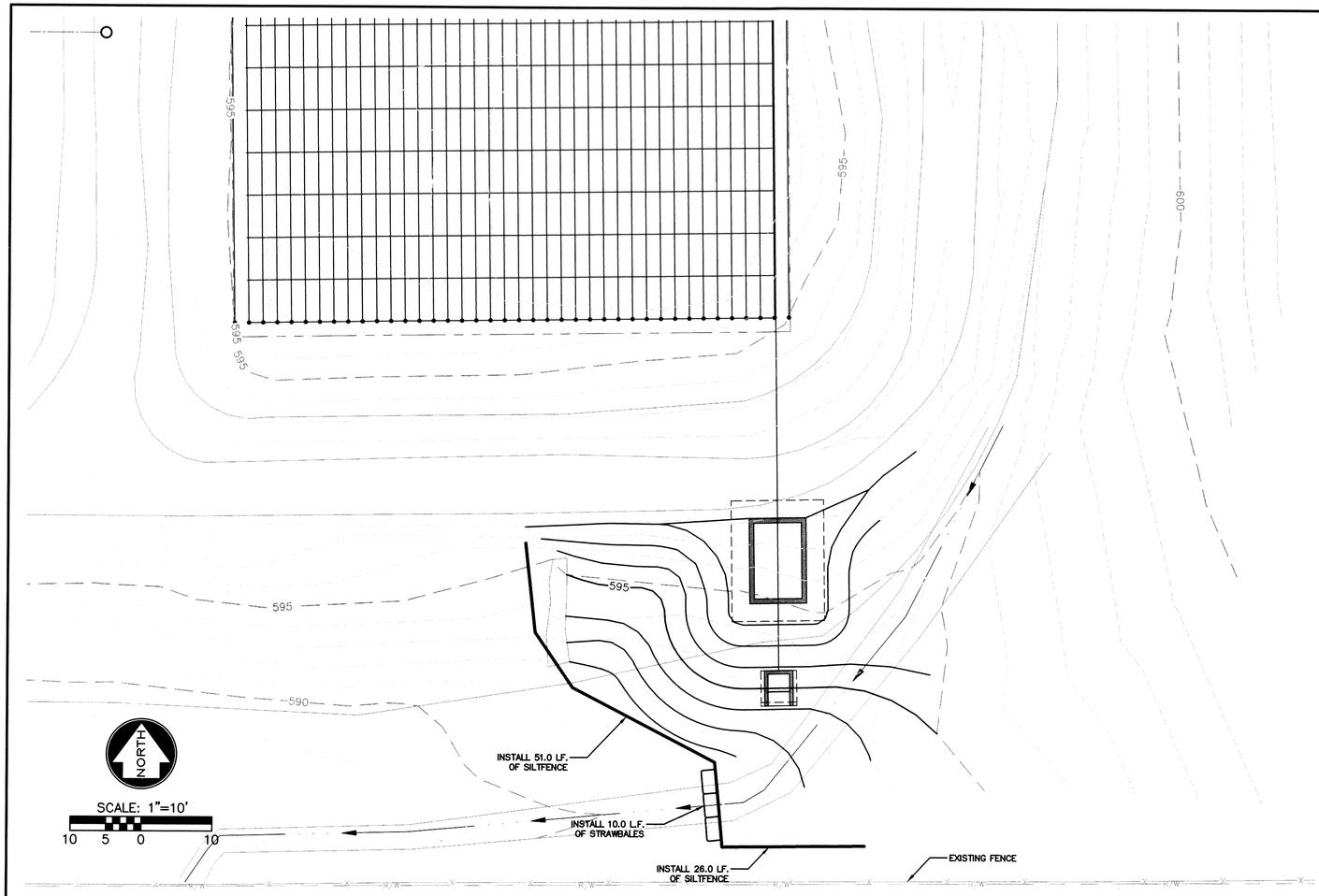

EROSION CONTROL PLAN

NOTES:

1. THE EROSION CONTROL FEATURES AND NOTES SHOWN ON THIS SHEET REPRESENT THE MINIMUM REQUIREMENTS ACCEPTABLE. LOCATIONS ARE TYPICAL AND MAY VARY ACCORDING TO CONTRACTORS STAGING AND LIMITS OF CONSTRUCTION.
2. IT SHALL BE EACH CONTRACTOR'S RESPONSIBILITY TO CONTROL EROSION AND PREVENT POLLUTION FOR ALL WORK WHICH THEY ARE DIRECTLY INVOLVED.
3. IT SHALL BE EACH CONTRACTORS RESPONSIBILITY TO PLACE ADDITIONAL CONTROL DEVICES AS REQUIRED DURING CONSTRUCTION TO PREVENT SOIL LOSS FROM THE SITE. IT SHALL ALSO BE EACH CONTRACTOR'S RESPONSIBILITY TO MAINTAIN THEIR EROSION CONTROL FEATURES IN PROPER WORKING CONDITION UNTIL THE SITE IS STABILIZED BY PAVEMENT, VEGETATION OR OTHER MEANS.
4. WHEN POSSIBLE, WITHOUT ADVERSELY AFFECTING CONSTRUCTION OPERATIONS, THE CONTRACTOR SHALL: MINIMIZE THE AMOUNT OF SURFACE AREA WHICH IS EXPOSED AT ONE TIME, LEAVE GRADED AREAS WITH A ROUGH TEXTURE, CONSTRUCT TEMPORARY TERRACES DURING GRADING OPERATIONS, AND LIMIT UNNECESSARY VEHICLE TRAFFIC IN GRADED AREAS.
5. THE SPILLAGE OF DEBRIS, INCLUDING THE TRACKING OF SOIL, OUTSIDE OF THE CONSTRUCTION LIMITS SHALL BE AVOIDED.
6. STRAW BALE DIKES OR SILT FENCES SHALL BE PLACED ON A CONTOUR ELEVATION ALONG THE DOWNHILL SIDE AND FOR THE FULL EXTENT OF THE DISTURBED AREAS WITHIN THE CONSTRUCTION LIMITS. THE LAST FIVE FEET ON EACH END OF RUN OF SILT FENCE/STRAW BALE DIKE SHALL BE PLACED FACING UPHILL AT 90 DEGREES TO THE CONTOUR LINE.
7. THE CONTRACTOR SHALL PREVENT SILT AND SEDIMENT FROM ENTERING THE STORM SEWER SYSTEM. STRAW BALE DIKES SHALL BE PLACED AROUND ALL STORM SEWER INLETS EXCEPT DURING CONSTRUCTION OPERATIONS WHICH REQUIRE THEIR REMOVAL.
8. CONTRACTOR SHALL INSPECT THEIR EROSION CONTROL DEVICES AFTER ALL RAINFALL EVENTS TO INSURE THEY ARE WORKING PROPERLY. THE CONTRACTOR SHALL ALSO INSPECT THE SITE AFTER ALL RAINFALL EVENTS AND ON A PERIODIC BASIS TO ASSESS THE NEED AND IF PRUDENT, INSTALL ADDITIONAL EROSION CONTROL DEVICES AS REQUIRED.
9. ALL AREAS UPON REACHING FINAL GRADE SHALL BE BROUGHT TO FINAL PLAN CONDITION (PAVED, MULCHED AND SEEDED, SODDED, OR OTHER) AS SOON AS POSSIBLE.

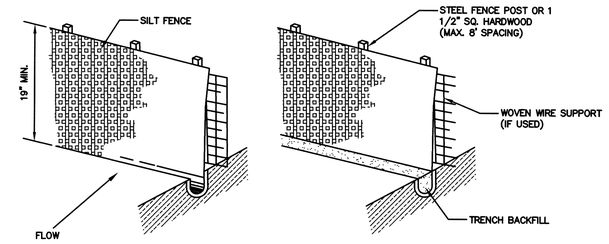

SILT FENCE DETAIL

NO SCALE

CONSTRUCTION SPECIFICATIONS:

1. POSTS WHICH SUPPORT THE SILT FENCE SHALL BE INSTALLED ON A SLIGHT ANGLE TOWARD THE ANTICIPATED RUNOFF SOURCE AND SPACED AT A MAX. 8' APART OR TO SILT FENCE MANUFACTURER SPECIFICATIONS, WHICHEVER IS STRICTER.
2. SILT FENCE SHALL BE TRENCHED IN WITH A SPADE OR MECHANICAL TRENCHER SO THAT THE DOWNSLOPE FACE OF THE TRENCH IS FLAT AND PERPENDICULAR TO THE LINE OF FLOW.
3. THE TRENCH SHOULD BE A MINIMUM OF 6" DEEP 3–4" WIDE TO ALLOW FOR THE SILT FENCE TO BE LAID IN THE GROUND AND BACKFILLED.
4. SILT FENCE SHOULD BE SECURELY FASTENED TO EACH SUPPORT POST OR TO WOVEN WIRE WHICH IS IN TURN ATTACHED TO THE FENCE POSTS.
5. INSPECTION SHALL BE FREQUENT AND REPAIR OR REPLACEMENT SHALL BE MADE PROMPTLY AS NEEDED.
6. SILT FENCE SHALL BE REMOVED WHEN IT HAS SERVED ITS USEFULNESS SO AS NOT TO BLOCK OR IMPEDE STORM FLOW OR DRAINAGE.
7. SEDIMENT TRAPPED BY THIS PRACTICE SHALL BE UNIFORMLY DISTRIBUTED ON THE SOURCE AREA PRIOR TO TOPSOILING.
8. SILT FENCE SHALL BE MIRAFI–100X FILTER FABRIC OR APPROVED EQUAL.

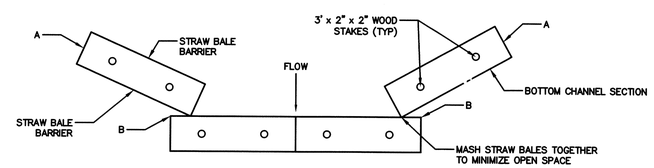

CONSTRUCTION NOTE:
– POINTS "A" SHOULD BE HIGHER THAN POINTS "B" TO INSURE FLOW THROUGH OR OVER BARRIER, NOT AROUND IT.

TOP VIEW DITCH APPLICATION DETAILS

DITCH CHECK SPACING			
DITCH ℄ SLOPE %	SPACING (FT)	DITCH ℄ SLOPE %	SPACING (FT)
.05	400	5.5	38
1.0	200	6.0	35
1.5	133	6.5	30
2.0	100	7.0	28
2.5	80	7.5	26
3.0	66	8.0	25
3.5	57	8.5	23
4.0	50	9.0	22
4.5	44	9.5	21
5.0	40	10.0	20

TEMPORARY STRAW BALE DITCH CHECK

NO SCALE

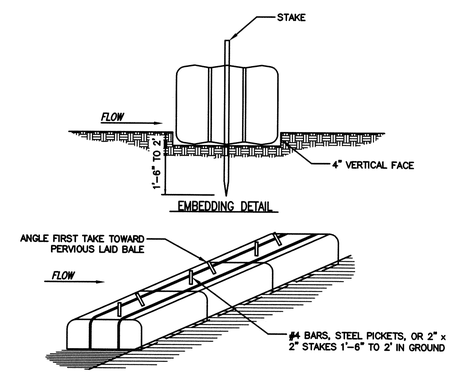

ANCHORING DETAIL

NOTES:

1. BALES SHALL BE PLACED IN A ROW WITH ENDS TIGHTLY ABUTTING THE ADJACENT BALES.
2. EACH BALE SHALL BE EMBEDDED IN THE SOIL A MINIMUM OF 4".
3. BALES SHALL BE SECURELY ANCHORED IN PLACE BY STAKES OR RE–BARS DRIVEN THROUGH THE BALES. THE FIRST STAKE IN EACH BALE SHALL BE ANGLED TOWARD PREVIOUSLY LAID BALE TO FORCE BALES TOGETHER.
4. INSPECTION SHALL BE FREQUENT AND REPAIR OR REPLACEMENT SHALL BE MADE PROMPTLY AS NEEDED.
5. BALES SHALL BE REMOVED WHEN THEY HAVE SERVED THEIR USEFULNESS SO AS NOT TO BLOCK OR IMPEDE STORM FLOW OR DRAINAGE BY THE OWNER.

STRAW BALE DIKE DETAIL

NO SCALE

NO.	DATE	REVISIONS	BY	APP'D
1				
2				
3				
4				
5				

Designed By: DES
Drawn By: JMB
Checked By: DES
Issue Date: 5/12

COPYRIGHT © – 2012 – SHAFER, KLINE & WARREN INC.
MISSOURI CERTIFICATE OF AUTHORITY: F00139850

SHAFER, KLINE & WARREN, INC.
3200 Penn Terrace, Suite 100, Columbia, MO 65202
573/442–4537 FAX: 573/442–4543
OFFICE LOCATIONS:
Chillicothe, MO
Columbia, MO
Houston, TX
Iola, KS
Kansas City, MO
Lenexa, KS
Macon, MO
North Kansas City, MO
Tulsa, OK
CIVIL ENGINEERS ELECTRICAL ENGINEERS MECHANICAL ENGINEERS STRUCTURAL ENGINEERS LANDSCAPE ARCHITECTS LAND SURVEYORS LAND PLANNERS

REST AREA SEWER SYSTEM IMPROVEMENTS
CAPE GIRARDEAU, FRUITLAND, MISSOURI

LAGOON IMPROVEMENTS
EROSION CONTROL PLAN

110535–010

SHEET NO.
C503

L:\110535-010_CAD\CIVIL\110535-010 - C - DET - 00.DWG
LAYOUT: C503 BY: JREIGELSBERGER DATE: 5/18/2012
XREF DWG1: NONE XREF DWG2: NONE
XREF DWG3: NONE XREF DWG4: NONE

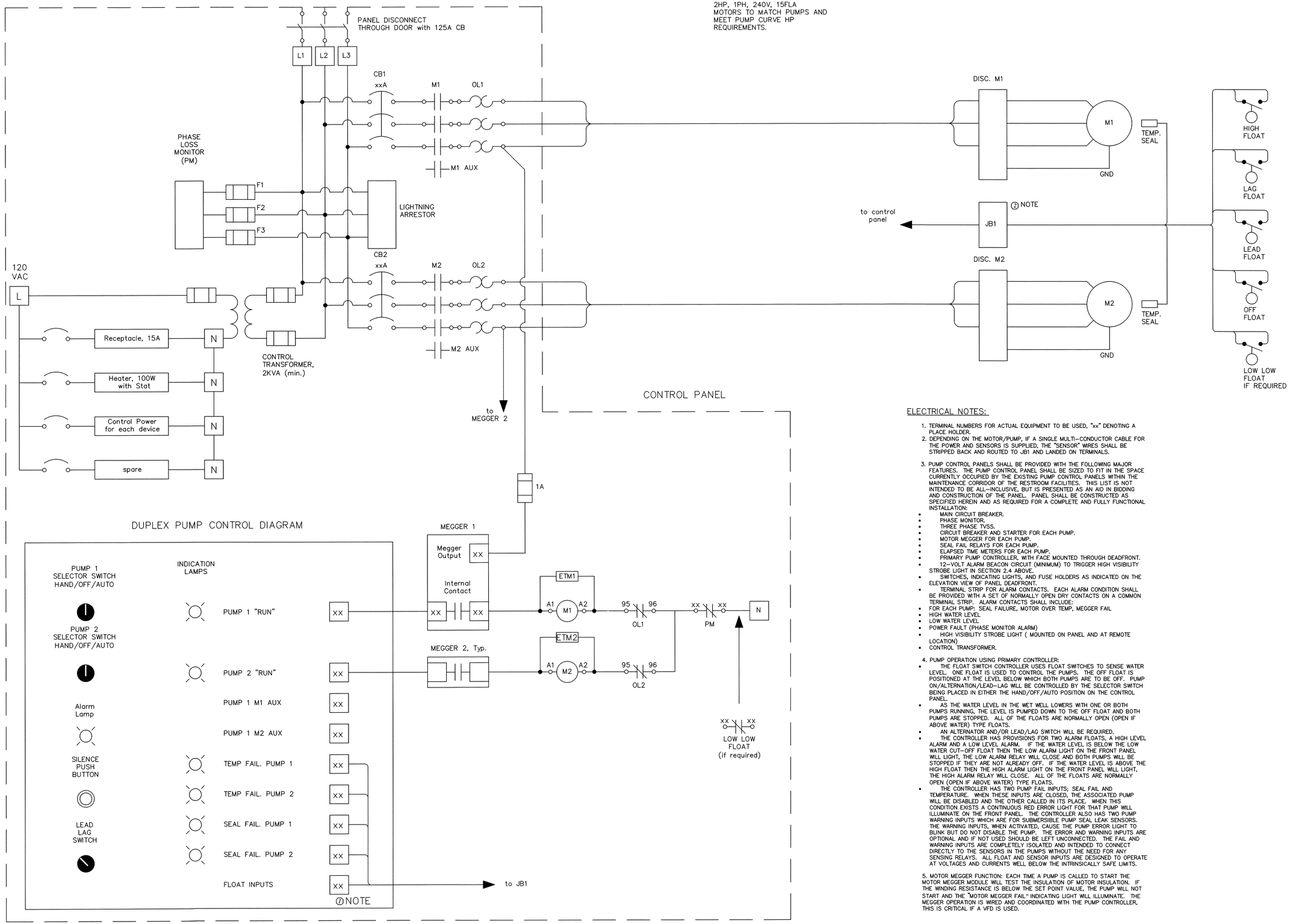

ELECTRICAL NOTES:

1. TERMINAL NUMBERS FOR ACTUAL EQUIPMENT TO BE USED, "xx" DENOTING A PLACE HOLDER.
2. DEPENDING ON THE MOTOR/PUMP, IF A SINGLE MULTI-CONDUCTOR CABLE FOR THE POWER AND SENSORS IS SUPPLIED, THE "SENSOR" WIRES SHALL BE STRIPPED BACK AND ROUTED TO JB1 AND LANDED ON TERMINALS.

3. PUMP CONTROL PANELS SHALL BE PROVIDED WITH THE FOLLOWING MAJOR FEATURES. THE PUMP CONTROL PANEL SHALL BE SIZED TO FIT IN THE SPACE CURRENTLY OCCUPIED BY THE EXISTING PUMP CONTROL PANELS WITHIN THE MAINTENANCE CORRIDOR OF THE RESTROOM FACILITIES. THIS LIST IS NOT INTENDED TO BE ALL-INCLUSIVE, BUT IS PRESENTED AS AN AID IN BIDDING AND CONSTRUCTION OF THE PANEL. PANEL SHALL BE CONSTRUCTED AS SPECIFIED HEREIN AND AS REQUIRED FOR A COMPLETE AND FULLY FUNCTIONAL INSTALLATION:
   - MAIN CIRCUIT BREAKER.
   - PHASE MONITOR.
   - THREE PHASE TVSS.
   - CIRCUIT BREAKER AND STARTER FOR EACH PUMP.
   - MOTOR MEGGER FOR EACH PUMP.
   - SEAL FAIL RELAYS FOR EACH PUMP.
   - ELAPSED TIME METERS FOR EACH PUMP.
   - PRIMARY PUMP CONTROLLER, WITH FACE MOUNTED THROUGH DEADFRONT.
   - 12-VOLT ALARM BEACON CIRCUIT (MINIMUM) TO TRIGGER HIGH VISIBILITY STROBE LIGHT IN SECTION 2.4 ABOVE.
   - SWITCHES, INDICATING LIGHTS, AND FUSE HOLDERS AS INDICATED ON THE ELEVATION VIEW OF PANEL DEADFRONT.
   - TERMINAL STRIP FOR ALARM CONTACTS. EACH ALARM CONDITION SHALL BE PROVIDED WITH A SET OF NORMALLY OPEN DRY CONTACTS ON A COMMON TERMINAL STRIP. ALARM CONTACTS SHALL INCLUDE:
   - FOR EACH PUMP: SEAL FAILURE, MOTOR OVER TEMP, MEGGER FAIL
   - HIGH WATER LEVEL
   - LOW WATER LEVEL
   - POWER FAULT (PHASE MONITOR ALARM)
   - HIGH VISIBILITY STROBE LIGHT (MOUNTED ON PANEL AND AT REMOTE LOCATION)
   - CONTROL TRANSFORMER.

4. PUMP OPERATION USING PRIMARY CONTROLLER:
   - THE FLOAT SWITCH CONTROLLER USES FLOAT SWITCHES TO SENSE WATER LEVEL. ONE FLOAT IS USED TO CONTROL THE PUMPS. THE OFF FLOAT IS POSITIONED AT THE LEVEL BELOW WHICH BOTH PUMPS ARE TO BE OFF. PUMP ON/ALTERNATION/LEAD-LAG WILL BE CONTROLLED BY THE SELECTOR SWITCH BEING PLACED IN EITHER THE HAND/OFF/AUTO POSITION ON THE CONTROL PANEL.
   - AS THE WATER LEVEL IN THE WET WELL LOWERS WITH ONE OR BOTH PUMPS RUNNING, THE LEVEL IS PUMPED DOWN TO THE OFF FLOAT AND BOTH PUMPS ARE STOPPED. ALL OF THE FLOATS ARE NORMALLY OPEN (OPEN IF ABOVE WATER) TYPE FLOATS.
   - AN ALTERNATOR AND/OR LEAD/LAG SWITCH WILL BE REQUIRED.
   - THE CONTROLLER HAS PROVISIONS FOR TWO ALARM FLOATS, A HIGH LEVEL ALARM AND A LOW LEVEL ALARM. IF THE WATER LEVEL IS BELOW THE LOW WATER CUT-OFF FLOAT THEN THE LOW ALARM LIGHT ON THE FRONT PANEL WILL LIGHT, THE LOW ALARM RELAY WILL CLOSE AND BOTH PUMPS WILL BE STOPPED IF THEY ARE NOT ALREADY OFF. IF THE WATER LEVEL IS ABOVE THE HIGH FLOAT THEN THE HIGH ALARM LIGHT ON THE FRONT PANEL WILL LIGHT, THE HIGH ALARM RELAY WILL CLOSE. ALL OF THE FLOATS ARE NORMALLY OPEN (OPEN IF ABOVE WATER) TYPE FLOATS.
   - THE CONTROLLER HAS TWO PUMP FAIL INPUTS; SEAL FAIL AND TEMPERATURE. WHEN THESE INPUTS ARE CLOSED, THE ASSOCIATED PUMP WILL BE DISABLED AND THE OTHER CALLED IN ITS PLACE. WHEN THIS CONDITION EXISTS A CONTINUOUS RED ERROR LIGHT FOR THAT PUMP WILL ILLUMINATE ON THE FRONT PANEL. THE CONTROLLER ALSO HAS TWO PUMP WARNING INPUTS WHICH ARE FOR SUBMERSIBLE PUMP SEAL LEAK SENSORS. THE WARNING INPUTS, WHEN ACTIVATED, CAUSE THE PUMP ERROR LIGHT TO BLINK BUT DO NOT DISABLE THE PUMP. THE ERROR AND WARNING INPUTS ARE OPTIONAL AND IF NOT USED SHOULD BE LEFT UNCONNECTED. THE FAIL AND WARNING INPUTS ARE COMPLETELY ISOLATED AND INTENDED TO CONNECT DIRECTLY TO THE SENSORS IN THE PUMPS WITHOUT THE NEED FOR ANY SENSING RELAYS. ALL FLOAT AND SENSOR INPUTS ARE DESIGNED TO OPERATE AT VOLTAGES AND CURRENTS WELL BELOW THE INTRINSICALLY SAFE LIMITS.

5. MOTOR MEGGER FUNCTION: EACH TIME A PUMP IS CALLED TO START THE MOTOR MEGGER MODULE WILL TEST THE INSULATION OF MOTOR INSULATION. IF THE WINDING RESISTANCE IS BELOW THE SET POINT VALUE, THE PUMP WILL NOT START AND THE "MOTOR MEGGER FAIL" INDICATING LIGHT WILL ILLUMINATE. THE MEGGER OPERATION IS WIRED AND COORDINATED WITH THE PUMP CONTROLLER, THIS IS CRITICAL IF A VFD IS USED.

NO.	DATE	REVISIONS	BY	APP'D
5				
4				
3				
2				
1				

COPYRIGHT © - 2012 - SHAFER, KLINE & WARREN INC.
MISSOURI CERTIFICATE OF AUTHORITY: F00139850

Designed By: PW
Drawn By: JWR
Checked By: PW
Issue Date: ____

STATE OF MISSOURI
PHILIP RYAN WILSON
NUMBER PE-2005021619
PROFESSIONAL ENGINEER

SHAFER, KLINE & WARREN, INC.
3200 Penn Terrace, Suite 100, Columbia, MO 65202
573/442-4537 FAX: 573/442-4543
OFFICE LOCATIONS:
Chillicothe, MO
Columbia, MO
Houston, TX
Iola, KS
Kansas City, MO
Lenexa, KS
Macon, MO
North Kansas City, MO
Tulsa, OK
CIVIL ENGINEERS ELECTRICAL ENGINEERS MECHANICAL ENGINEERS STRUCTURAL ENGINEERS LANDSCAPE ARCHITECTS LAND SURVEYORS LAND PLANNERS

REST AREA SEWER SYSTEM IMPROVEMENTS
CAPE GIRARDEAU, FRUITLAND, MISSOURI

CONTROL PANEL DETAILS

110535-010

SHEET NO.
E1

L:\110535-010_CAD\MEP\110535 - L.S. - ELEC.DWG
LAYOUT: L.S. DETAILS
XREF DWG1: NONE
XREF DWG3: NONE
BY: JREGELSBERGER
DATE: 5/18/2012
XREF DWG2: NONE
XREF DWG4: NONE

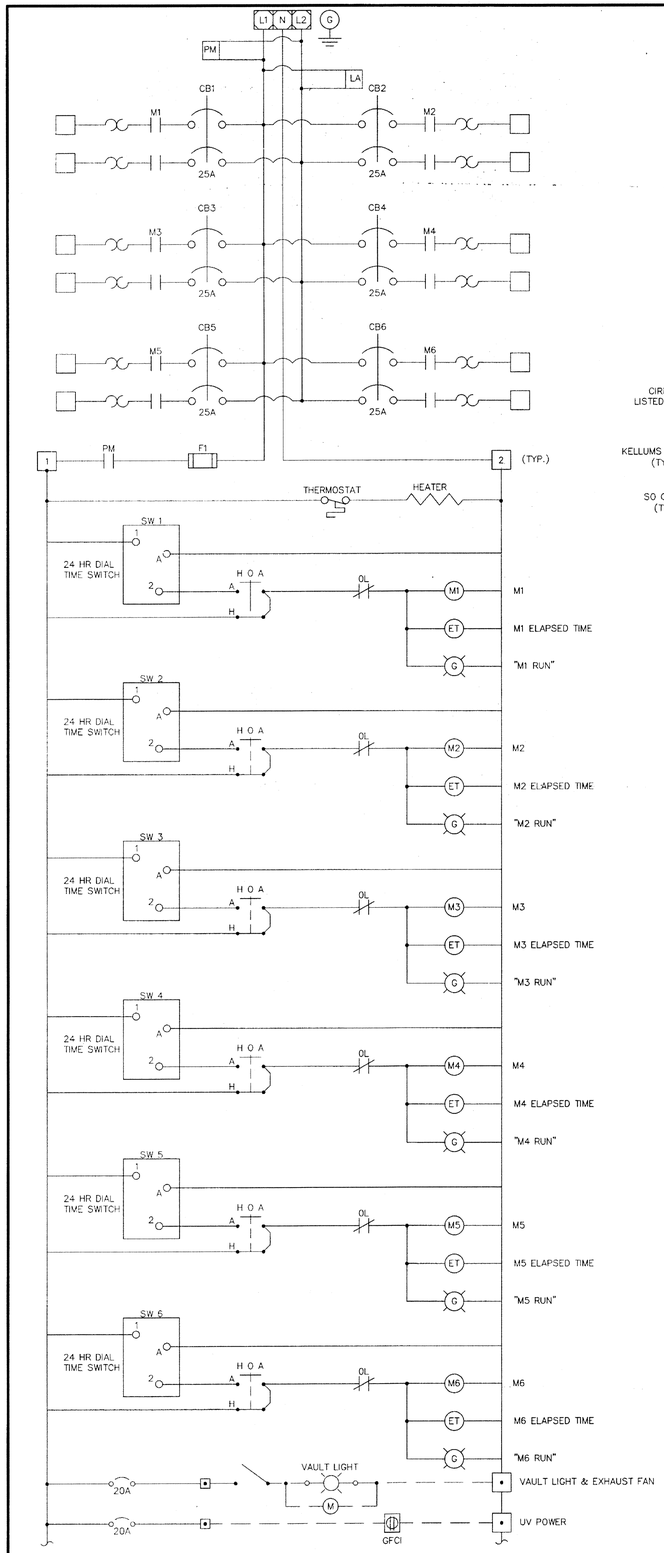

1 CONTROL SCHEMATIC
NOT TO SCALE

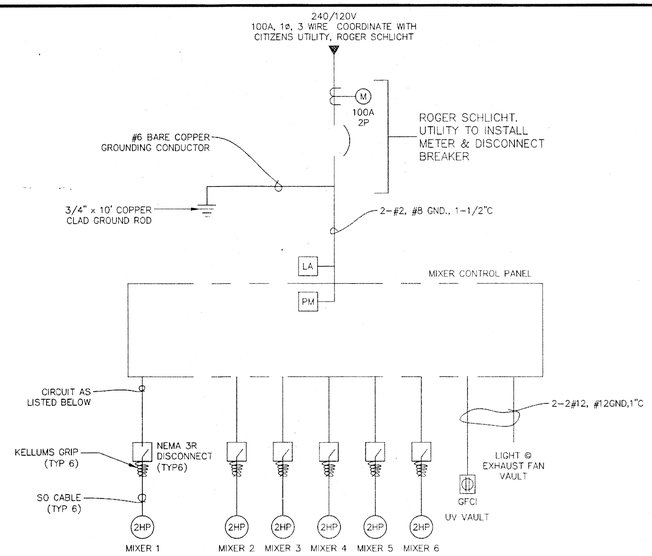

CIRCUITS:

MIXER 1:	2#8,	#8GND.,	1"C
MIXER 2:	2#8,	#8GND.,	1"C
MIXER 3:	2#10,	#10GND.,	3/4"C
MIXER 4:	2#10,	#10GND.,	3/4"C
MIXER 5:	2#12,	#12GND.,	3/4"C
MIXER 6:	2#12,	#12GND.,	3/4"C

2 ONE-LINE DIAGRAM
NOT TO SCALE

ELECTRICAL NOTES:

1. DESIGN IS BASED ON 2 HP MIXER MOTORS WITH FULL LOAD AMPS OF 12 AMPS. IF PROPOSED EQUIPMENT IS GREATER, THE SERVICE SHALL BE 200 AMP, 240/120 VOLT, SINGLE PHASE

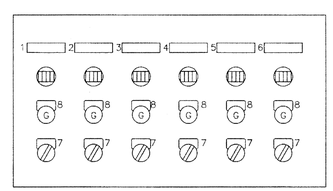

INNER DOOR

NEMA 4X

NAMEPLATE LEGEND

1. MIXER #1
2. MIXER #2
3. MIXER #3
4. MIXER #4
5. MIXER #5
6. MIXER #6
7. ON-OFF SWITCH
8. RUN
9. AERATOR CONTROL PANEL (A)

3 INTERIOR CONTROL PANEL LAYOUT
NOT TO SCALE

LIGHT FIXTURE SCHEDULE

MARK: VAULT LIGHT
ELECT: 120 VOLT
REMARKS: METALUX CATALOG VT-232DR-UNC-EB81-WL-GT4-U OR EQUIVALENT, FIBERGLASS HOUSING, VAPORTITE INDUSTRIAL LISTED FOR WET LOCATION, 2 LAMP, CLEAR ACRYLIC LENS, SURFACE MOUNT

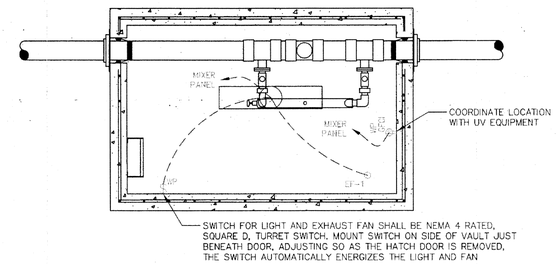

7 VAULT PLAN
NOT TO SCALE

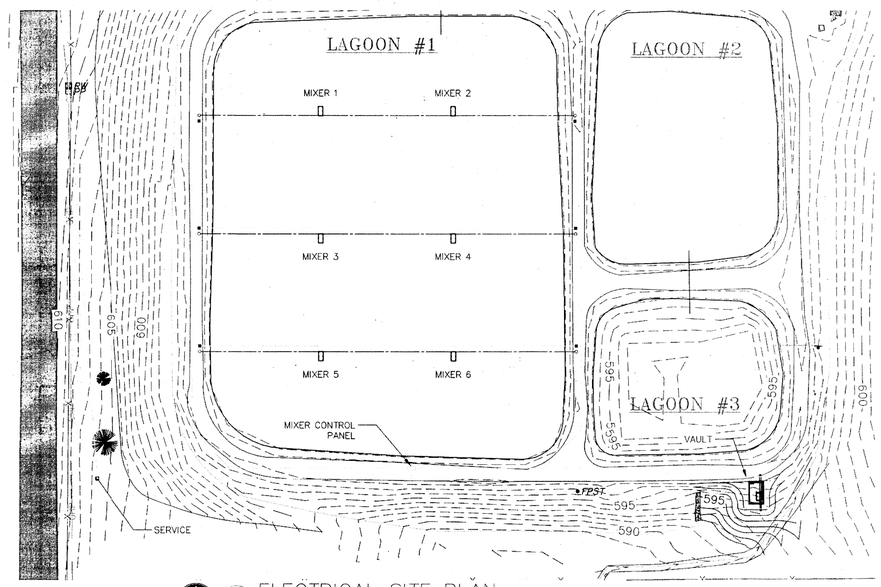

8 ELECTRICAL SITE PLAN
1" = 40'

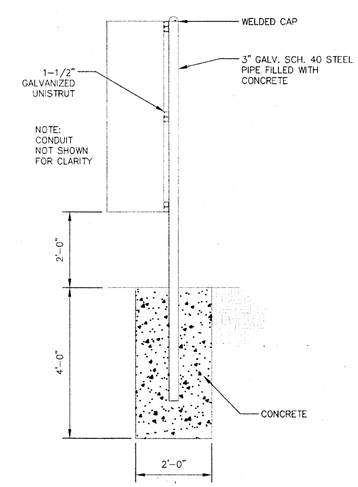

4 ELECTRICAL RACK ELEV.
1" = 2'

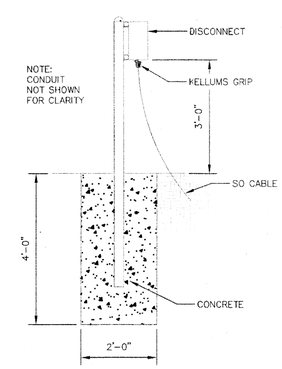

5 VAULT DISCON. ELEV.
1" = 2'

NO.	DATE	REVISIONS	BY	APP'D
1				
2				
3				
4				
5				

Designed By: DCS
Drawn By: JMB
Checked By: DKD
Issue Date: ____

STATE OF MISSOURI DICKSON NUMBER E-22058 REGISTERED PROFESSIONAL ENGINEER
s/(e)/rc

COPYRIGHT © - 2012 - SHAFER, KLINE & WARREN INC.
MISSOURI CERTIFICATE OF AUTHORITY: F0013985

SHAFER, KLINE & WARREN, INC.
3200 Penn Terrace, Suite 100, Columbia, MO 65202
573/442-4537 FAX: 573/442-4543
OFFICE LOCATIONS:
Chillicothe, MO
Columbia, MO
Houston, TX
Iola, KS
Kansas City, MO
Lenexa, KS
Macon, MO
North Kansas City, MO
Tulsa, OK
CIVIL ENGINEERS ELECTRICAL ENGINEERS MECHANICAL ENGINEERS STRUCTURAL ENGINEERS LANDSCAPE ARCHITECTS LAND SURVEYORS LAND PLANNERS

REST AREA SEWER SYSTEM IMPROVEMENTS
CAPE GIRARDEAU, FRUITLAND, MISSOURI

LAGOON IMPROVEMENTS
VAULT ELECTRICAL DETAILS

110535-010

SHEET NO.
E2

L:\110535-010_CAD\WEP\110535-010 - E - ESP - 01.DWG
LAYOUT: E2 VAULT ELECTRICAL DETAILS | B1: BURNETTE | DATE: 5/18/2012
XREF DWG1: NONE | XREF DWG2: NONE
XREF DWG3: NONE | XREF DWG4: NONE