REQUEST FOR BID (RFB) FORM

MAILING ADDRESS:
MISSOURI DEPARTMENT OF TRANSPORTATION
GENERAL SERVICES, P.O. BOX 270
JEFFERSON CITY, MO 65102

REQUEST NO.	9-120619RJ
DATE	June 4, 2012

SEALED BIDS, SUBJECT TO THE CONDITIONS ON ALL PAGES OF THIS RFB WILL BE RECEIVED AT THIS OFFICE UNTIL

2:00 PM LOCAL TIME; June 19, 2012

AND THEN PUBLICLY OPENED AND READ FOR FURNISHING THE FOLLOWING SUPPLIES OR SERVICES. SIGN AND RETURN BEFORE TIME SET FOR OPENING.

BIDS TO BE BASED F.O.B.
MISSOURI DEPARTMENT OF TRANSPORTATION

Boonville, MO

BUYER: Reva Jones **EMAIL:** reva.jones@modot.mo.gov **BUYER TELEPHONE:** 573-526-2744

The purpose of this Request For Bids (RFB) is to seek bids from qualified organizations to provide a **Water and Sewer Extension and Concrete Block Truck Wash at the Boonville Maintenance Facility in Boonville, Missouri**. The project described as **"Water and Sewer Extension and Concrete Block Truck Wash"** shall be completed according to project drawings and specifications. The pricing being solicited under this RFB is for bids to be rendered to the Missouri Highways and Transportation Commission (hereinafter, "MHTC" or "Commission"), acting by and through its operating arm, the Missouri Department of Transportation (hereinafter, "MoDOT").

Notice to Contractors

MoDOT will receive bids at the following mailing address: P.O. Box 270, Jefferson City, MO 65102-0270, or hand-delivered in a sealed envelope to the following physical address: General Services Procurement at 830 MoDOT Drive, Jefferson City, MO 65109 until 2:00 p.m., June 12, 2012. Bid forms and information may be obtained by contacting Reva Jones at 573-526-2744, reva.jones@modot.mo.gov, or electronically download them at no charge from http://modot.mo.gov/business/contractor_resources/FacilitiesConstructionandMaintenance.htm. Prevailing wage as established by the Missouri Department of Labor and Industrial Relations shall apply. Bid securities in the amount of 5% of the bid will be required to accompany bids. Bids must be made on forms provided by the Commission. The Commission reserves the right to reject any or all bids and to waive irregularity in the bids and the bidding. No bid may be amended or withdrawn after the bid is opened.

A pre-bid conference is scheduled for June 12, 2012 @ 10:00 a. m. Local Time at the Boonville Maintenance Facility.
Directions to the Boonville Maintenance Facility: **16803 Highway 5, Boonville, Missouri 65233**

Written Questions: All written questions must be addressed to Reva Jones no later than 2:00 p.m., Local Time, Thursday, June 14, 2012 at the following mailing address: Missouri Dept. of Transportation, General Services Procurement Unit, P.O. Box 270, Jefferson City, MO 65102-0270 or by e-mail to reva.jones@modot.mo.gov. Any questions received after this deadline will not be accepted. MoDOT may issue an addendum and post the responses to all questions on-line for vendors to retrieve. Responses to the questions will be posted on MoDOT's website at:
http://modot.mo.gov/business/contractor_resources/FacilitiesConstructionandMaintenance.htm
in the form of a written addendum. It is anticipated this addendum will be issued on Friday, June 15, 2012. It is the sole responsibility of the Bidder to check for any and all addendums throughout the Bid process.

(SEE ATTACHED FOR TERMS, CONDITIONS, AND INSTRUCTIONS)

In compliance with the above Request For Bid, and subject to all conditions thereof, the undersigned bidder agrees to furnish and deliver any or all the items on which prices were bid within the timeframe specified herein.

Date: _____ **Firm Name:** _____

Telephone No.: _____ **Address:** _____

Fax No.: _____ _____

Federal I.D. No. _____ **By (Signature):** _____

Email Address: _____ **Type/Print Name** _____

Title:

Is your firm MBE certified? ☐ Yes ☐ No **Is your firm WBE certified?** ☐ Yes ☐ No

TABLE OF CONTENTS

DIVISION		PAGE
DIVISION 0 - BIDDING AND CONTRACT INFORMATION		
	FINAL CHECKLIST BEFORE SUBMITTING PROPOSAL	1
00100	BIDDER REQUIREMENTS	2
00301	BID FORM	8
00430	SUBCONTRACTOR LISTING	12
00600	BID BOND	13
DIVISION 1 – GENERAL REQUIREMENTS (BROAD SCOPE)		
01019	CONTRACT REQUIREMENTS	14
01039	COORDINATION AND MEETING REQUIREMENT	16

Shafer, Kline and Warren, Inc. Project Drawings and Technical Specifications
Truck Wash Drawings
Annual Wage Order #18 for Cooper County
Terms & Conditions

FINAL CHECKLIST BEFORE SUBMITTING PROPOSAL

_____1. Complete the Bid Form by filling in the total dollar amount of the bid; listing any addenda which may have been issued; filling in the dollar amount of the bidder's check or Bid Bond, sign the proper signature line, and supply the required information in connection with the signature for the individual bidder, joint adventurer, or corporation.

_____2. Submit Bid Bond executed by the bidder and surety. Bidders are required to use the Bid Bond furnished by the Commission or attach cashier's check to Bid Bond form. Personal checks are not accepted.

_____3. Complete Subcontractor section by listing major subcontractor(s) and general supervisor(s), sign as required.

_____4. Complete Vendor Information and Preference Certification Form.

_____5. If addenda(s) are issued attach to the back of the bid package.

00100

BIDDER REQUIREMENTS

1. SCOPE OF WORK

Work under this contract will include the construction of a truck wash facility to serve the Boonville Maintenance Facility, including a water line extension, gravity sewer extension, and an 8" CMU building with nominal dimensions of 30'-0" wide x 50'-0" long x 16'0" eave height. Include wood trusses, sheet metal roof, concrete foundation and incidental site work. Work shall include all materials and labor associated with the contract as specified and indicated on the drawings.

2. BID INSTRUCTIONS

In order to receive consideration, bids must be made in strict accordance with the following.

A. Make bids, upon the forms provided herein, properly signed and with all items filled out. Do not change the wording of the bid form and do not add words to the bid form. Unauthorized conditions, limitations or provisions attached to the bid will be cause for rejection of the bid.

B. No telegraphic bid or telegraphic modification of a bid will be considered. No bids received after the time fixed for receiving them will be considered. Late bids will be returned to the bidder unopened.

C. Address bids to the Missouri Department of Transportation, and deliver to the address given in the Invitation for Bid, on or before the day and hour set for opening the bids. Enclose each bid in a sealed envelope bearing the title of the Work, the name of the bidder, and the date and hour of the bid opening. Submit only the original signed copy of the bid. It is the sole responsibility of the bidder to see that the bid is received on time.

3. INVOICING AND PAYMENT

A. Each invoice should be itemized in accordance with items listed on the contract in accordance with Section 01019, Contract Considerations, Applications for Payment provisions. Failure to comply with this requirement may delay processing of invoices for payment.

B. Unless otherwise provided for in the solicitation documents, payment for all equipment, supplies, and/or services required herein shall be made in arrears. The Commission shall not make any advance deposits.

C. The Commission assumes no obligation for equipment, supplies, and/or services shipped or provided in excess of the quantity ordered. Any authorized quantity is subject to the Commission's rejection and shall be returned at the Contractor's expense.

D. The Commission reserves the right to purchase goods and services using the state-purchasing card.

4. EXAMINATION OF DOCUMENTS AND SITE OF WORK

A. Before submitting a bid, each bidder shall examine the Drawings carefully, read the Specifications and all other proposed Contract Documents, and visit the site of the work. Each bidder shall fully inform themselves, prior to bidding, as to existing conditions and limitations under which the Work is to be performed and shall include in his bid a sum to cover the cost of items necessary to perform the Work, as set forth in the proposed Contract Documents. No allowance will be made to a bidder because of lack of such examination or knowledge. The submission of a bid will be considered conclusive evidence that the bidder has made such examination.

B. The contract price shall include any necessary permits and licenses required by law incidental to the work. Local ordinances requiring building permits are not applicable to the state. Contractor will comply with local laws involving safety in the prosecution of the work.

5. INTERPRETATION

No oral interpretations will be made to any bidder as to the meaning of the plans and specifications or the acceptability of alternate products, materials, form or type of construction. Every request for interpretation shall be made in writing and submitted with all supporting documents not less than five (5) days before opening of bids. The request shall be sent directly to the Senior Facilities Designer. Every interpretation made to a bidder will be in the form of an addendum and will be sent as promptly as is practicable to all persons to whom plans and specifications have been issued. All such addenda shall become part of the contract documents.

6. PROOF OF COMPETENCY OF BIDDER

A bidder may be required to furnish evidence, satisfactory to the Commission, that he and his proposed subcontractor(s) have sufficient means and experience in the types of work called for to assure completion of the Contract in a satisfactory manner.

7. WITHDRAWAL OF BIDS

After the bid opening, a vendor may be permitted to withdraw a bid prior to award at the sole discretion of the division if there is a verifiable error in the bid and enforcement of the bid would impose an unconscionable hardship on the vendor. This withdrawal will be considered only after receipt of a written request and supporting documentation from the vendor. Withdrawal shall be the vendor's sole remedy for an error other than an obvious clerical error. Withdrawal of a bid may result in forfeiture of the bid bond.

8. AWARD OR REJECTION OF BIDS

The Contract, if awarded, will be made on an "All or None" basis using the "lowest and best" principle of award, subject to the Commission's right to reject any or all bids and to waive informality and irregularity in the bids and in the bidding.

9. CONTRACT DOCUMENTS

The contract expresses the complete agreement of the parties and performance shall be governed solely by the specifications and requirements contained therein. Any change, whether by modification and/or supplementation, must be accomplished by a formal contract amendment signed and approved by and between the duly authorized representative of the Contractor and the duly authorized representative of the Commission, by a modified purchase order prior to the effective date of such modification. The Contractor expressly and explicitly understands and agrees that no other method and/or no other document, including correspondence, acts, and oral communications by or from any person, shall be used or construed as an amendment or modification.

10. SUBMITTALS

Review of Submittals. The Architect/Engineer/Designer review of submittals is only for the limited purpose of checking for conformance with information given and seeing if they conform to design intent. The General Services Facilities Manager is not responsible for determining the accuracy of measurements and completeness of details, for verifying quantities, or for checking fabrication or installation procedures. The General Services Facilities Manager's review does not relieve the contractor of his or her responsibilities under the contract documents. The submittal process shall be carried out as outlined in Section 01300, Submittals.

11. WORK QUALITY

A. Inspection of Work. The General Services Facility Operations Supervisor or designated representative shall be permitted to inspect all work, materials, payrolls, records of personnel, invoices of materials, and other data and records relating to the work. If requested by the General Services-Facility Operations Supervisor or designated representative, the contractor shall at any time before final acceptance of the work uncovers any portion of the finished work as directed for inspection. After examination, the contractor shall restore said portions of the work to the standards required by the contract. Should the work thus exposed and examined prove acceptable, the actual cost of uncovering, removing and replacing shall be paid by the Commission. Should the work so exposed and examined prove unacceptable, the uncovering, removing and replacing shall be at the expense of the contractor.

B. Defective Work. All work which has been rejected shall be remedied, or if necessary, removed and replaced in an acceptable manner by the contractor at its expense. If the contractor fails to remedy or replace such defective work immediately after receiving written notice from the General Services-Facility Operations Supervisor or designated representative, the Commission may employ labor to correct the defective work, and the cost incurred in making such corrections shall be deducted from the payment due or to become due the contractor under this contract.

C. Contractor will provide a one-year warranty for parts and labor on all building material, and equipment or a standard manufacturer's warranty whichever is greater. All warranties, including extended service agreements shall begin upon MoDOT's written acceptance of the punch list items.

D. Contractor's Responsibility for Work. Until the General Services-Facility Operations Supervisor or designated representative, accepts the work, it shall be in the custody and under the charge and care of the contractor. Contractor shall rebuild, repair, restore or make good at its own expense any lost or stolen Commission-owned material and all injuries or damages to any portion of the work caused by action of the elements or from any other reason before its completion and final acceptance. Issuance of a payment estimate on any part of the work done will not be considered as final acceptance of any work completed up to that time.

E. Preservation of Utilities and Monuments. The contractor shall be responsible for the preservation of all public and private utilities, wires, lines, pipes, poles, cables, and conduit at the site of the work and shall use every precaution necessary to prevent damage or injury thereto. The contractor shall not disturb or damage any land monument or property landmark until an authorized agent has witnessed or otherwise referenced, their location and shall not remove them until directed by General Services Facilities Manager.

F. Cooperation with Other Contractors. The contractor shall arrange its work so as not to interfere with the operations of other contractors of the Commission which might be engaged in performing adjacent or nearby work. Whenever work being done by other contractors is contiguous or related to the work involved in this contract, the respective rights of the various contractors will be determined by the General Services-Facility Operations Supervisor or designated representative in order to secure the completion of the work under all contracts in general harmony.

G. The contractor will be required to remove from the Commission's property all debris.

H. Temporary Suspension of Work. The General Services-Facility Operations Supervisor or designated representative shall have authority to suspend work, wholly or in part, for such period or periods of time as he may deem necessary when weather or other conditions are such that in the opinion of the General Services-Facility Operations Supervisor or designated representative the work may be done at a later time with advantage to the Commission or for failure on the part of the contractor to comply with any of the provisions of the contract. The contractor may suspend work for reasonable cause with written approval of the General Services-Facility Operations Supervisor or designated representative. Liquidated damages shall not accrue during the period in which work is suspended with the approval of the General Services-Facility Operations Supervisor or designated representative, however, if the suspension is because of the contractor's failure to comply to any of the provisions of the contract, the contractor shall not be entitled to an extension of completion time nor to a waiver of liquidated damages. In the event work is suspended, the contractor shall store all materials in a manner that will protect them from damage, and shall take every precaution to prevent damage or deterioration of, the portions of the work completed. If work has been discontinued for any reason, the contractor shall give the General Services-Facility Operations Supervisor or designated representative written notice at least forty-eight (48) hours before resuming operations.

12. CHANGE ORDERS

A. General. All departures from the plans and specifications will be considered unauthorized unless, before proceeding with the work, the contractor has had delivered to it a change order, signed by the General Services-Facility Operations Supervisor or designated representative, authorizing and directing such changes or departures. All unauthorized work shall be at the contractor's expense and the General Services-Facility Operations Supervisor or designated representative may order such unauthorized work removed and replaced at the contractor's expense.

B. Overhead and Profit on Change Orders. The percentages for overhead and profit charged on Change Orders and Field Work Authorizations shall be negotiated and may vary according to the nature, extent and complexity of the work involved. However, the overhead and profit for the contractor or subcontractor actually performing the work shall not exceed 15%. When one or more tiers of subcontractors are used, in no event shall any contractor or subcontractor receive as overhead and profit more than 7% of the cost of the work performed by any of his subcontractors. In no case shall the total overhead and profit paid by the owner on any change order exceed twenty five percent (25%) of the cost of materials, labor and equipment necessary to put the change order work in place.

C. Contractor's Procedure for Claims. If the contractor considers additional compensation may be due for work or material not clearly covered in the contract or ordered in writing by the General Services-Facility Operations Supervisor or designated representative as extra work, or if additional compensation may be requested beyond the scope of such provisions, the contractor shall notify the General Services-Facility Operations Supervisor or designated representative in writing of the intention to make a claim before beginning the work in question. If notification is not given and the General Services-Facility Operations Supervisor or designated representative is not afforded proper facilities by contractor to provide necessary inspection and for keeping strict account of actual cost, the contractor agrees to waive any claims for additional compensation. Notice by the contractor, and the fact that the General Services-Facility Operations

Supervisor or designated representative has kept account of the cost shall not be construed as substantiating the validity of the claim. The contractor shall file a written notice of claim for additional compensation in triplicate within 60 days after completing the work in question.

a. If the claim is against the Commission, the notice of claim shall be personally delivered, or sent by certified mail to the office of the Secretary of the Commission in Jefferson City, Missouri. All notices of claims shall contain an itemized statement showing completely and fully the items and amounts forming the basis of the claim.

b. Any claim or an item of any claim, not included in the notice and statement, or any claim included but not clearly defined and specifically set out and itemized or any claim not filed within the time and in the manner provided, shall be forever waived and shall neither constitute the basis of nor be included in any legal action, counterclaim, set-off, or arbitration.

c. All claims filed with Missouri Highway and Transportation Commission's Secretary will be forwarded to the Missouri Department of Transportation's Claims Committee.

13. GENERAL PERFORMANCE

A. Bidders are encouraged to obtain minority business enterprise (MBE) and women business enterprise (WBE) participation in this work through the use of subcontractors, suppliers, joint ventures, or other arrangements that afford meaningful participation for M/WBEs. Bidders are encouraged to obtain 10% MBE and 5% WBE participation.

B. This work is to be performed under the general supervision and direction of the Missouri Department of Transportation (MoDOT) and, if awarded any portion of the work, the Contractor agrees to furnish at his own expense all labor and equipment required to complete the work, it being expressly understood that this solicitation is for completed work based upon the price(s) specified and is not a solicitation for rental of equipment or employment of labor by MoDOT, and MoDOT is to have no direction or control over the employees used by the Contractor in performance of the work.

14. REMEDIES AND RIGHTS

A. No provision in the contract shall be construed, expressly or implied, as a waiver by the MHTC of any existing or future right and/or remedy available by law in the event of any claim by the MHTC of the Contractor's default or breach of contract.

B. The Contractor agrees and understands that the contract shall constitute an assignment by the Contractor to the MHTC of all rights, title and interest in and to all causes of action that the Contractor may have under the antitrust laws of the United States or State of Missouri for which causes of action have accrued or will accrue as the result of or in relation to the particular equipment, supplies, and/or services purchased or produced by the Contractor in the fulfillment of the contract with the MHTC.

C. In the event a Contractor becomes involved in, or is threatened with, litigation with a subcontractor or supplier as a result of such direction, the Contractor may request MoDOT to enter into such litigation to protect the interests of the MHTC, and, in addition, the Contractor may request the United States to enter into such litigation to protect the interests of the United States.

15. INVENTIONS, PATENTS, AND COPYRIGHTS

The Contractor shall defend, protect, and hold harmless the MHTC, its officers, agents, and employees against all suits of law or in equity resulting from patent and copyright infringement concerning the Contractor's performance or products produced under the terms of the contract.

16. INSPECTION AND ACCEPTANCE

A. No equipment, supplies, and/or services received by MoDOT pursuant to a contract shall be deemed accepted until MoDOT has had reasonable opportunity to inspect said equipment, supplies, and/or services.

B. All equipment, supplies, and/or services which do not comply with the specifications and/or requirements or which are otherwise unacceptable or defective may be rejected. In addition, all equipment, supplies, and/or services which are discovered to be defective or which do not conform to any warranty of the Contractor upon inspection (or at any later time if the defects contained were not reasonably ascertainable upon the initial inspection) may be rejected.

C. The MHTC reserves the right to return any such rejected shipment at the Contractor's expense for full credit or replacement and to specify a reasonable date by which replacements must be received.

D. The MHTC's right to reject any unacceptable equipment, supplies, and/or services shall not exclude any other legal, equitable or contractual remedies the MHTC may have.

17. DEFINITIONS

Architect/Engineer/Designer: When the term "Architect or Engineer or Designer" is used herein, it shall refer to Steve Schultz of Shafer, Kline & Warren, Inc. 573-234-2651 (Direct line)/573-268-6714 (Cell) or Doug Record [General Services Manager – Facilities, Missouri Department of Transportation] (573) 526-7937, FAX (573) 526-6948.

MoDOT Inspector or Facility Operations Supervisor: When the term "MoDOT Inspector or Facility Operations Supervisor" is used herein, it shall refer to those MoDOT individuals authorized to perform site inspections by Phillip Hamilton, [Facility Operations Supervisor in the Central District], (573) 751-7850.

Owner: When the term "Owner" is used herein, it shall refer to Missouri Department of Transportation (MoDOT).

VENDOR INFORMATION & PREFERENCE CERTIFICATION FORM

Vendor Information

All bidders must furnish ALL applicable information requested below

Vendor Name/Mailing Address: Email Address:	**Vendor Contact Information (including area codes):** **Phone #:** Cellular #: Fax #:
Printed Name of Responsible Officer or Employee:	**Signature:**
For Corporations - State in which incorporated:	**For Others** - State of domicile:

If the address listed in the Vendor Name/Mailing Address block above is not located in the State of Missouri, list the address of Missouri offices or places of business:

*If additional space is required, please attach an additional sheet and identify it as **Addresses of Missouri Offices or Places of Business.***

M/WBE INFORMATION: List all certified Minority or Women Business Enterprises (**M/WBE**) utilized in the fulfillment of this bid. Include percentages for subcontractors and identify the M/WBE certifying agency:

M/WBE Name	Percentage of Contract	M/WBE Certifying Agency

*If additional space is required, please attach an additional sheet and identify it as **M/WBE Information***

Preference Certification

All bidders must furnish ALL applicable information requested below

GOODS/PRODUCTS MANUFACTURED OR PRODUCED IN USA: If any or all of the goods or products offered in the attached bid which the bidder proposes to supply to the MHTC are **not** manufactured or produced in the "United States", or imported in accordance with a qualifying treaty, law, agreement, or regulation, list below, by item or item number, the country other than the United States where each good or product is manufactured or produced.

Item (or item number)	Location Where Item is Manufactured or Produced

*If additional space is required, please attach an additional sheet and identify it as **Location Products are Manufactured or Produced.***

MISSOURI SERVICE-DISABLED VETERAN BUSINESS: Please complete the following if applicable. Additional information may be requested if preference is applicable. See below definitions for qualification criteria:

Service-Disabled Veteran is defined as any individual who is disabled as certified by the appropriate federal agency responsible for the administration of veterans' affairs.

Service-Disabled Veteran Business is defined as a business concern:

a. Not less than fifty-one (51) percent of which is owned by one or more service-disabled veterans or, in the case of any publicly owned business, not less than fifty-one (51) percent of the stock of which is owned by one or more service-disabled veterans; and
b. The management and daily business operations of which are controlled by one or more service-disabled veterans.

Veteran Information	Business Information
Service-Disabled Veteran's Name (Please Print)	Service-Disabled Veteran Business Name
Service-Disabled Veteran's Signature	Missouri Address of Service Disabled Veteran Business

00301

BID FORM

To: The Missouri Highway and Transportation Commission
PO Box 270
Jefferson City, Missouri 65102

1. The undersigned, having examined the proposed Contract Documents titled: **9-120619RJ – Water and Sewer Extension and Concrete Block Truck Wash** and having visited the site and examined the conditions affecting the work, hereby proposes and agrees to furnish all labor, materials, equipment and everything which may be necessary or incidental thereto, as proposed by said Contract Documents, all to the satisfaction of the General Services-Facility Operations Supervisor or designated representative of the Missouri Department of Transportation and the Missouri Highway and Transportation Commission, for the stipulated sum of:

Item #1 - Water and Sewer Extension

_____DOLLARS ($_____)

Item #2 - Concrete Block Truck Wash Base Bid

_____DOLLARS ($_____)

Total Amount (Items #1 and #2 Together)

_____DOLLARS ($_____)

Alternate Bid #1

_____DOLLARS ($_____)

2. The undersigned, acknowledges having examined and being familiar with the contract documents including the drawings, the Instructions to Bidders, General Conditions, Supplementary Conditions and the body of technical specifications.

3. The undersigned acknowledges receipt of Addenda number _____ through _____ inclusive.

4. Enclosed with this bid is bid security in the amount of not less than 5% of the bidder's proposed Contract Sum, the amount being _____ DOLLARS ($_____).

IF AN INDIVIDUAL

_____ _____
Name of individual Residence address

_____ _____
Social Security Number Telephone Number

_____
Firm Name, If Any

_____

_____ _____
Address for communications Signature

IF A PARTNERSHIP

_____
Name of Partnership

_____
Partner

_____
Partner

_____
Address for Communications

_____
Telephone Number

(State Name and Residence Address of All Partners)

_____

_____
Residence Address

_____

_____
Residence Address

_____
Federal Tax I.D. Number

_____
Signature of Either Partner

IF A CORPORATION

_____
Name of Corporation

_____
Name and Title of Officer

_____
Signature of officer

_____

_____
Address for Communications

_____
Telephone Number

Incorporated under the laws of the
State of_____

Corporate License No. _____
(If a corporation organized in a state other than Missouri, attach Certificate of Authority to do business in the State of Missouri.)

_____
Federal Tax I.D. Number

(ATTEST)

_____
(SEAL) Secretary

(Each bidder must complete the Bid Form by signing in the proper signature line above and by supplying the required information called for in connection with the signature. The information called for is necessary in the proper preparation of the contract and performance bond.)

ANNUAL WORKER ELIGIBILITY VERIFICATION AFFIDAVIT
(for joint ventures, a separate affidavit is required for each business entity)

STATE OF _____)
) ss
COUNTY OF _____)

On the _____ day of _____, 20____, before me appeared _____, personally known
Affiant name
to me or proved to me on the basis of satisfactory evidence to be a person whose name is subscribed to this affidavit, who being by me duly sworn, stated as follows:

- I, the Affiant, am of sound mind, capable of making this affidavit, and personally certify the facts herein stated, as required by Section 285.530, RSMo, to enter into any contract agreement with the state to perform any job, task, employment, labor, personal services, or any other activity for which compensation is provided, expected, or due, including but not limited to all activities conducted by business entities.
- I, the Affiant, am the _____ of _____, and I am duly authorized, directed, and/or empowered to act officially and properly on behalf of this business entity.
  title business name
- I, the Affiant, hereby affirm and warrant that the aforementioned business entity is enrolled in a federal work authorization program operated by the United States Department of Homeland Security, and the aforementioned business entity shall participate in said program to verify the employment eligibility of newly hired employees working in connection with any services contracted by the Missouri Highways and Transportation Commission (MHTC). I have attached documentation to this affidavit to evidence enrollment/participation by the aforementioned business entity in a federal work authorization program, as required by Section 285.530, RSMo.
- I, the Affiant, also hereby affirm and warrant that the aforementioned business entity does not and shall not knowingly employ, in connection with any services contracted by MHTC, any alien who does not have the legal right or authorization under federal law to work in the United States, as defined in 8 U.S.C. § 1324a(h)(3).
- I, the Affiant, am aware and recognize that, unless certain contract and affidavit conditions are satisfied pursuant to Section 285.530, RSMo, the aforementioned business entity may be held liable under Sections 285.525 though 285.550, RSMo, for subcontractors that knowingly employ or continue to employ any unauthorized alien to work within the state of Missouri.
- I, the Affiant, acknowledge that I am signing this affidavit as a free act and deed of the aforementioned business entity and not under duress.

_____ Affiant
Signature

Subscribed and sworn to before me in _____, _____, the day and year first above-written.
city (or county) state

_____
Notary Public

My commission expires:

[documentation of enrollment/participation in a federal work authorization program attached]

APPLICANT AFFIDAVIT FOR SOLE-PROPRIETORSHIP OR PARTNERSHIP
(a separate affidavit is required for each owner and general partner)

STATE OF _____)
) ss
COUNTY OF _____)

On this _____ day of _____, 20____, before me appeared _____, personally known to me or proved to me on the basis of satisfactory evidence to be the person whose name is subscribed to the within instruments, who being by me duly sworn, deposed as follows:

My name is _____, and I am of sound mind, capable of making this affidavit, and personally certify the facts herein stated, as required by Section 208.009, RSMo, for failure to provide affirmative proof of lawful presence in the United States of America:

I am the _____ (owner or partner) of _____ (business name), which is applying for a public benefit (grant, contract, and/or loan) administered/provided by the Missouri Highways and Transportation Commission (MHTC), acting by and through the Missouri Department of Transportation (MoDOT).

I am classified by the United States of America as: (check the applicable box)

- ☐ a United States citizen.
- ☐ an alien lawfully admitted for permanent residence.

I am aware that Missouri law provides that any person who obtains any public benefit by means of a willfully false statement or representation, or by willful concealment or failure to report any fact or event required to be reported, or by other fraudulent device, shall be guilty of the crime of stealing pursuant to Section 570.030, RSMo, which is a Class C felony for stolen public benefits valued between $500 and $25,000 (punishable by a term of imprisonment not to exceed 7 years and/or a fine not more than $5,000 – Sections 558.011 and 560.011, RSMo), and is a Class B felony for stolen public benefits valued at $25,000 or more (punishable by a term of imprisonment not less than 5 years and not to exceed 15 years – Section 558.011, RSMo).

I recognize that, upon proper submission of this sworn affidavit, I will only be eligible for temporary public benefits until such time as my lawful presence in the United States is determined, or as otherwise provided by Section 208.009, RSMo.

I understand that Missouri law requires MHTC/MoDOT to provide assistance in obtaining appropriate documentation to prove citizenship or lawful presence in the United States, and I agree to submit any requests for such assistance to MHTC/MoDOT in writing.

I acknowledge that I am signing this affidavit as a free act and deed and not under duress.

_____ Affiant Signature

_____ Affiant's Social Security Number or Applicable Federal Identification Number

Subscribed and sworn to before me this _____ day of _____, 20____.

_____
Notary Public

My commission expires:

00430

SUBCONTRACTOR LISTING

1. For portions of Work equaling or exceeding 1% of the total proposed Contract Sum, the undersigned proposes to use the following subcontractors. Except as otherwise approved by the Owner, the undersigned proposes to perform all other portions of the Work with his own forces.

2. Portion of the Work: Subcontractor name and address:

_____ _____

_____

_____

_____ _____

_____

_____

_____ _____

_____

_____

USE ADDITIONAL SHEETS IF REQUIRED

BIDDER:

_____

PROVIDE SIGNATURE IDENTICAL TO THAT SHOWN ON THE BID FORM

by_____

00600

BID BOND

KNOW ALL MEN BY THESE PRESENTS, that we _____,

as Principal, and _____,

as Surety, are held firmly bound unto the State of Missouri (acting by and through the Missouri Highway and Transportation Commission) in the penal sum of

_____ Dollars

($_____), to be paid to the State of Missouri, or the Missouri Highway and Transportation Commission, to be credited to the State Road Fund and Principal and Surety binding themselves, their heirs, executors, administrators, successors and assigns, jointly and severally, firmly by these presents.

Sealed with our seals and dated this _____ day of _____, 20_____

THE CONDITION OF THIS OBLIGATION is such that:
WHEREAS, the Principal is submitting herewith a bid to the Missouri Highway and Transportation Commission on

Route(s) _____,

in _____ County(ies), Project(s) _____,

for construction or improvement as set out in said proposal.

NOW THEREFORE, if the Missouri Highway and Transportation Commission shall accept the bid of the Principal, and if said Principal shall properly execute and deliver to the Missouri Highway and Transportation Commission the Contract, Contract Bond, Specifications and evidence of insurance coverage in compliance with the requirements of the Proposal, to the satisfaction of the Missouri Highway and Transportation Commission, then this obligation shall be void and of no effect, otherwise to remain in full force and effect.

In the event the said Principal shall, in the judgment of the Missouri Highway and Transportation Commission, fail to comply with any requirement as set forth in the preceding paragraph, then the Stat of Missouri, acting through the Missouri Highway and Transportation Commission, shall immediately and forthwith be entitled to recover the fees, and any other expense of recovery.

_____	_____
Principal	Surety
By_____	_____
	Attorney in Fact (SEAL)

Attest: (CORPORATE SEAL)

_____
Corporate Secretary

Note: This bond must be executed by the Principal and by a Corporate Surety authorized to conduct surety business in the State of Missouri.

END OF SECTION

01019

CONTRACT REQUIREMENTS

PART 1 GENERAL

1.1 SECTION INCLUDES

A. Schedule of values.
B. Application for payment.
C. Change procedures.
D. Alternatives.

1.2 RELATED SECTIONS

A. Section 01600 - Material and Equipment: Product substitutions.

1.3 SCHEDULE OF VALUES

A. Submit a printed schedule on Contractor's standard form. Electronic media printout will be considered.

B. Submit Schedule of Values in duplicate within 20 days after date of Owner-Contractor Agreement.

C. Revise schedule to list approved Change Orders, with each Application for Payment.

1.4 APPLICATIONS FOR PAYMENT

A. Submit four copies of each application on Contractor's electronic media driven form.
B. Content and Format: Utilize Schedule of Values for listing items in Application for Payment.
C. Payment Period: 30 days.
D. Submit waiver of liens from vendors.
E. Include an updated construction progress schedule.
F. Certified payroll records.

1.5 CHANGE PROCEDURES

A. The Architect/Engineer/Designer may issue a Notice of Change that includes a detailed description of a proposed change with supplementary or revised Drawings and specifications, a change in Contract Time for executing the change with a stipulation of any overtime work required.

B. The Contractor may propose changes by submitting a request for change to the Architect/Engineer/Designer describing the proposed change and its full effect on the Work. Include a statement describing the reason for the change, the effect on the Contract Sum/Price and Contract Time, and a statement describing the effect on Work by the MoDOT District or other Contractors.

C. Stipulated Sum/Price Change Order: Based on Notice of Change and Contractor's fixed price quotation or Contractor's request for a Change Order as approved by Architect/Engineer/Designer.

D. Construction Change Directive: Architect/Engineer/Designer may issue a directive instructing the Contractor to proceed with a change in the Work, for subsequent inclusion in a Change Order. Document will describe changes in the Work, and designate method of determining any change in Contract Sum/Price or Contract Time. Promptly execute the change.

E. Time and Material Change Order: Submit itemized account and supporting data after completion of change, within time limits indicated in the Conditions of the Contract. Architect/Engineer/Designer will determine the change allowable in Contract Sum/Price and Contract Time as provided in the Contract Documents.

F. Maintain detailed records of work done on Time and Material basis. Provide full information required for evaluation of proposed changes, and to substantiate costs for changes in the Work.

G. Execution of Change Orders: Architect/Engineer/Designer will issue Change Orders for signatures of parties as provided in the Conditions of the Contract.

1.6 DEFECT ASSESSMENT

A. Replace the Work, or portions of the Work, not conforming to specify requirements.

B. If, in the opinion of the Architect/Engineer/Designer, it is not practical to remove and replace the Work, the Architect/Engineer/Designer will direct an appropriate remedy or adjust payment.

1.7 ALTERNATIVES

A. Accepted Alternatives will be identified in Owner-Contractor Agreement.

END OF SECTION

01039

COORDINATION AND MEETING REQUIREMENT

PART 1 GENERAL

1.1 SECTION INCLUDES

A. Coordination and project conditions.
B. Field engineering.
C. Preconstruction meeting.
D. Site mobilization meeting.
E. Progress meetings.
F. Pre-installation meetings.
G. Equipment electrical characteristics and components.
H. Examination.
I. Preparation.
J. Cutting and Patching.
K. Alteration project procedures.

1.2 COORDINATION AND PROJECT CONDITIONS

A. Coordinate scheduling, submittals, and Work of the various sections of the Project Manual to ensure efficient and orderly sequence of installation of interdependent construction elements.

B. Verify utility requirements and characteristics of operating equipment are compatible with building utilities. Coordinate work of various sections having interdependent responsibilities for installing, connecting to and placing in service, such equipment.

C. Coordinate space requirements, supports, and installation of mechanical and electrical Work, which are indicated diagrammatically on Drawings. Follow routing shown for pipes, ducts, and conduit, as closely as practicable; place runs parallel with lines of building. Utilize spaces efficiently to maximize accessibility for other installations, for maintenance, and for repairs.

D. In finished areas, except as otherwise indicated, conceal pipes, ducts and wiring within the construction. Coordinate locations of fixtures and outlets with finish elements.

E. Coordinate completion and cleanup of Work of separate sections in preparation for Substantial Completion.

F. After Owner occupancy of premises, coordinate access to site for correction of defective Work and Work not in accordance with Contract Documents, to minimize disruption of Owner's activities.

1.3 FIELD ENGINEERING

A. Employ a Land Surveyor registered in the State of Missouri and acceptable to Architect/Engineer/Designer.
B. Owner will locate and protect survey control and reference points.
C. Control datum for survey is that established by Owner provided survey.
D. Verify setbacks and easements; confirm drawing dimensions and elevations.
E. Provide field engineering services. Establish elevations, lines and levels, utilizing recognized engineering survey practices.

1.4 PRECONSTRUCTION MEETING

A. Architect/Engineer/Designer will schedule a meeting after Notice of Award.
B. Attendance Required: District engineer or representative, Architect/Engineer/Designer and Contractor.
C. Record minutes and distribute copies within 5 days after meeting to participants, with two copies to District Engineer, Architect/Engineer/Designer, participants and those affected by decisions made.

1.5 SITE MOBILIZATION MEETING

A. Architect/Engineer/Designer will schedule a meeting at the Project site prior to Contractor occupancy.

B. Architect/Engineer/Designer will record minutes and distributes copies within 5 days after meeting to participants, with two copies to Architect/Engineer/Designer, participants and those affected by decisions made.

1.6 PROGRESS MEETINGS

A. Schedule and administer meetings throughout progress of the Work at when arranged by Architect/Engineer/Designer.

B. Architect/Engineer/Designer will make arrangements for meetings, prepare agenda with copies for participants, and preside at meetings.

C. Attendance Required: Job superintendent, major Subcontractors and suppliers, District engineer representative, Architect/Engineer/Designer, as appropriate to agenda topics for each meeting.

D. Agenda:
1. Review of Work progress.
2. Field observations, problems, and decisions.
3. Identification of problems, which impede planned progress.
4. Maintenance of progress schedule.
5. Corrective measures to regain projected schedules.
6. Coordination of projected progress.
7. Effect of proposed changes on progress schedule and coordination.

E. Record minutes and distributes copies within 5 days after meeting to participants and those affected by decisions made.

1.7 PREINSTALLATION MEETING

A. When required in individual specification sections, convene a pre-installation meeting at the site prior to commencing work of the section.
B. Notify Architect/Engineer/Designer seven days in advance of meeting date.
C. Prepare agenda and preside at meeting:
1. Review conditions of installation, preparation and installation procedures.
2. Review coordination with related work.
D. Record minutes and distributes copies within 5 days after meeting to participants and those affected by decisions made.

PART 2 PRODUCTS

Not used

PART 3 EXECUTION

Not used

END OF SECTION

PLANS FOR

MISSOURI DEPARTMENT OF TRANSPORTATION

BOONVILLE MAINTENANCE FACILITY - TRUCK WASH IMPROVEMENTS

COOPER COUNTY, BOONVILLE, MISSOURI

SEC. 16 - T48N - R17W

BENCHMARKS:

TBM #1= EXISTING AL. CAP @ W/S BASE 8" TALL CONC. POST FOR MODOT VRS SATELLITE DST, 100'± N/O MAIN ENT. TO MODOT SHED 5'± W/O EDGE OF ASP. PARKING LOT.
SET ELEVATION = 778.10

TBM #2= SET CHISELED "□" @ NW CORNER OF AREA INLET LID @ NW QUAD OF HIGHWAY 5 & ENTRANCE TO LOVE'S TRUCK STOP.
SET ELEVATION = 767.43

(SEE SITE PLAN FOR LOCATION)

GENERAL CONSTRUCTION NOTES:

- SIGNAGE NEEDS TO BE MOVED BEFORE CONSTRUCTION IN THE PROSPECTIVE AREA AND REPLACED AFTER CONSTRUCTION OF THE GIVEN AREA HAS BEEN COMPLETED.
- POWER POLES IN THE EFFECTED AREA NEED TO BE BRACED DURING CONSTRUCTION
- ALL UTILITIES MUST BE LOCATED PRIOR TO CONSTRUCTION
- ALL TELEPHONE LINE THAT REQUIRE NEW PLACEMENT THE CONTRACTOR IS RESPONSIBLE TO COORDINATE WITH THE TELEPHONE COMPANY.

NOTES TO CONTRACTOR:

1. THE LOCATIONS OF UTILITY MAINS, STRUCTURES AND SERVICE CONNECTIONS PLOTTED ON THIS DRAWING ARE APPROXIMATE ONLY AND WERE OBTAINED FROM RECORDS MADE AVAILABLE TO SKW, INC. THERE MAY BE OTHER EXISTING UTILITY MAINS, STRUCTURES AND SERVICE CONNECTIONS NOT KNOWN TO SKW, INC. AND NOT SHOWN ON THIS DRAWING. THE VERIFICATION OF EXISTENCE OF, AND THE DETERMINATION OF EXACT LOCATION OF, UTILITY MAINS, STRUCTURES AND SERVICE CONNECTIONS SHALL BE THE RESPONSIBILITY OF THE CONSTRUCTION CONTRACTOR(S).
2. NOTIFY UTILITY COMPANIES OF THE SCHEDULE PRIOR TO EACH STAGE OF CONSTRUCTION.
3. PRIOR TO CONSTRUCTION, THE CONTRACTOR SHALL UNCOVER EXISTING UTILITIES AT CRITICAL LOCATIONS TO VERIFY EXACT HORIZONTAL AND VERTICAL LOCATIONS.
4. THE MEANS OF THE WORK AND THE SAFETY OF THE CONTRACTOR'S EMPLOYEES ARE SOLELY THE RESPONSIBILITY OF THE CONTRACTOR.
5. NO WORK SHALL BE PERFORMED BEYOND THE PROJECT LIMITS WITHOUT PRIOR AUTHORIZATION FROM THE OWNER'S REPRESENTATIVE.
6. PROTECT EXISTING UTILITIES DURING CONSTRUCTION.
7. MAINTAIN POSITIVE DRAINAGE ON THE SITE THROUGHOUT THE PROJECT DURATION.
8. SITE CLEAN-UP SHALL BE PERFORMED ON A DAILY BASIS. SIDEWALKS, PARKING LOT, ROADWAYS, ETC. SHALL BE KEPT CLEAN AT ALL TIMES. DISPOSAL OF DEMOLITION ITEMS OFF-SITE.
9. ALL OPEN EXCAVATIONS SHALL BE PROTECTED.
10. REPLACE ANY PROPERTY MONUMENT REMOVED OR DESTROYED BY CONSTRUCTION. MONUMENTS SHALL BE SET BY A LAND SURVEYOR REGISTERED TO PRACTICE IN THE STATE OF MO.
11. MINIMIZE DUST SPREADING FROM ALL WORK AND STAGING AREAS.
12. ANY WORK REQUIRED TO COMPLETE THE SCOPE OF THIS PROJECT BUT NOT SPECIFICALLY CALLED OUT, SHALL BE CONSIDERED INCIDENTAL TO THE PROJECT. NO ADDITIONAL COMPENSATION SHALL BE ALLOWED FOR THE COMPLETION OF THIS WORK.
13. REPAIR OR REPLACE EXISTING FACILITIES (CURB, PAVEMENT, UTILITIES, ETC.) TO REMAIN, AT NO ADDITIONAL EXPENSE TO THE OWNER.
14. WORK WHICH DOES NOT CONFORM TO THE REQUIREMENTS OF THE CONTRACT WILL BE CONSIDERED UNACCEPTABLE. UNACCEPTABLE WORK, WHETHER THE RESULTS OF POOR WORKMANSHIP, USE OF DEFECTIVE MATERIAL, DAMAGE THROUGH CARELESSNESS OR ANY OTHER CAUSE, FOUND TO EXIST PRIOR TO THE FINAL ACCEPTANCE OF THE WORK, SHALL BE REMOVED AND REPLACED IN AN ACCEPTABLE MANNER, AT THE CONTRACTOR'S EXPENSE. WORK DONE BEYOND THE LINES SHOWN ON THE PLANS OR ANY EXTRA WORK DONE WITHOUT AUTHORITY WILL NOT BE PAID FOR.
15. THE PROPERTY LINE SHALL BE CONSIDERED THE CONSTRUCTION/PROJECT LIMITS LINE, WITH EXCEPTION TO ADDITIONAL AREAS SHOWN ON THIS DRAWING.
16. DO WORK AT TIMES APPROVED BY OWNER.
17. CONTRACTOR TO TRANSPORT EXCESS EARTH MATERIALS OFF-SITE.
18. CONTRACTOR TO SECURE HIS OWN STAGING AND EQUIPMENT/MATERIAL STORAGE AREA.
19. THE CONTRACTOR SHALL ADHERE TO THE PROVISIONS OF THE SENATE BILL NUMBER 583, 78TH GENERAL ASSEMBLY OF THE STATE OF MISSOURI. THE BILL REQUIRES THAT ANY PERSON OR FIRM DOING EXCAVATION ON PUBLIC RIGHTS-OF-WAY DO SO ONLY AFTER GIVING NOTICE TO, AND OBTAINING INFORMATION FROM, UTILITY COMPANIES. STATE LAW REQUIRED 72 HOURS ADVANCED NOTICE

UTILITIES:

GAS & ELECTRIC-	AMEREN UE (800.552.7583)
WATER-	CITY OF BOONVILLE (660.882.5257)
SEWER-	CITY OF BOONVILLE (660.882.5257)
TELEPHONE & CABLE-	ATT DISTRIBUTION (660.584.2288)

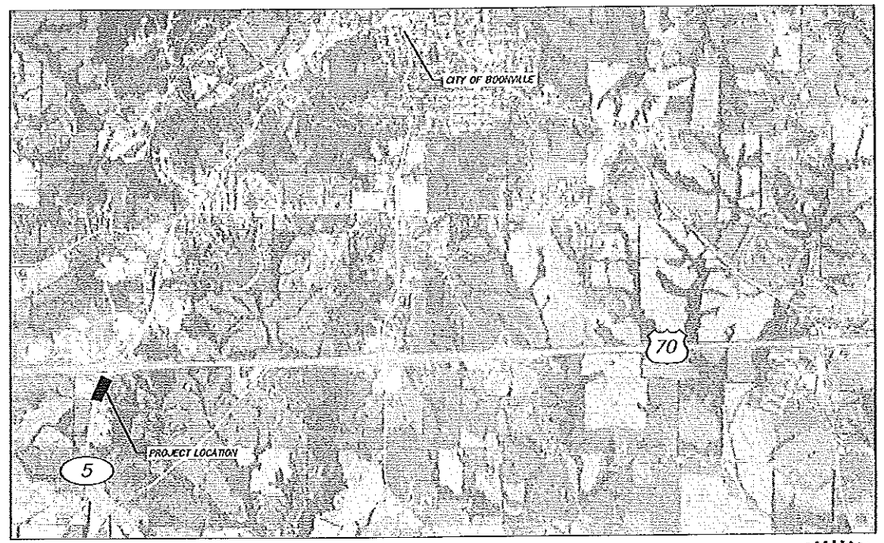

LOCATION MAP
NOT TO SCALE

NORTH

STATE OF MISSOURI
STEVEN R. SCHULTZ
NUMBER PE-2001004664
PROFESSIONAL ENGINEER

STEVEN R. SCHULTZ
PE-2001004664

IN KANSAS 1-800-344-7233 DIG-SAFE

IN MISSOURI 1-800-344-7483 DIG-RITE

Know what's below. Call before you dig.

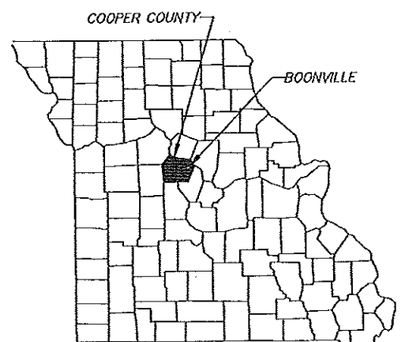

KEY MAP

ABBREVIATIONS:

AC	AIR CONDITIONER
BSKB	IN-PLACE -or- MOVABLE BASKETBALL GOAL
CMP	CORRUGATED METAL PIPE
CONC	CONCRETE
CP#	SURVEY CONTROL POINT (NUMBER)
EXIST	EXISTING
FH	FIRE HYDRANT
GA	GUY ANCHOR
GIR	NATURAL GAS INSTRUMENT RISER
GM	GAS METER
GRVL	GRAVEL
GTPST	GATE POST
GV	NATURAL GAS VALVE
GVMKR	GRAVE MARKER
MB	MAIL BOX
MS	METAL SIGN
PP	POWER POLE
PRISER	POWER RISER
RCP	REINFORCED CONCRETE PIPE
SCO	SEWER CLEAN OUT
SM/H	STORM SEWER MANHOLE
TBM	TEMPORARY BENCHMARK
TC	TOP OF CONCRETE
TEP	TELEPHONE PEDESTAL
TP	TELEPHONE POLE -or- TOP OF PAVEMENT
TYP	TYPICAL
U.N.O.	UNLESS NOTED OTHERWISE
WFCT	WATER FAUCET
WM	WATER METER
WP	WOOD FENCE POST
YDLT	YARD LIGHT

SYMBOLS LEGEND:

UNDERGROUND TELEPHONE LINE
SANITARY SEWER LINE
STORM SEWER LINE -or- PIPE
WATER LINE
GAS LINE
DITCH FLOW LINE
FENCE LINE
RAIL ROAD TRACKS
TREE
TREE STUMP
LANDSCAPE BOULDER
GUY ANCHOR
TELEPHONE PEDESTAL
TELEPHONE POLE
TELEPHONE MARKER
POWER -or- TELEPHONE POLE GAS MARKER
NATURAL GAS VALVE
WATER VALVE
NATURAL GAS RISER
POWER RISER
SEWER CLEAN OUT
SANITARY SEWER MANHOLE STORM SEWER MANHOLE
FIRE HYDRANT
WATER FAUCET
GAS METER
AIR CONDITIONER
WATER METER
BASKETBALL GOAL
YARD LIGHT
MAIL BOX
GRAVE MARKER
METAL SIGN
FLAG POLE
TEMPORY BENCH MARK
SURVEY CONTROL POINT
NORTH ARROW
DRAWING SCALE

INDEX OF SHEETS

SHEET NUMBER	SHEET TITLE
C001	COVER SHEET
C100	DEMOLITION PLAN
C200	SANITARY SEWER PLAN & PROFILE
C201	SANITARY SEWER PLAN & PROFILE
C202	UTILITY AND GRADING PLAN
C500	CONSTRUCTION DETAILS
C501	CONSTRUCTION DETAILS

MoDOT SHEET INDEX

SHEET #	OF SHEETS	SHEET TITLE
1	15	COVER SHEET
2	15	PLOT PLAN
3	15	FLOOR PLAN - BASE BID
4	15	FLOOR PLAN - ALTERNATE #1
5	15	FOUNDATION DETAILS
6	15	FOUNDATION DETAILS
7	15	BUILDING SECTION - BASE BID
8	15	BUILDING SECTION - ALTERNATE #1
9	15	DETAILS
10	15	WEST ELEVATION - BASE BID
11	15	WEST ELEVATION - ALTERNATE #1
12	15	EAST ELEVATION - BASE BID
13	15	EAST ELEVATION - ALTERNATE #1
14	15	GENERAL NOTES
15	15	MECHANICAL PLAN - ALTERNATE #1

NO.	DATE	REVISIONS	BY	APP'D
4	4.25.2012	NEW SET	JMB	SRS
3	11.08.2011	CITY COMMENTS	JMB	MAH
2	9.21.2011	MoDOT COMMENTS	JMB	MAH
1	9.01.2011	MoDOT COMMENTS	JMB	MAH

Designed By: SRS
Drawn By: JMB
Checked By: PRB
Issue Date: 10.3.2011

COPYRIGHT © - 2011 - SHAFER, KLINE & WARREN INC.
MISSOURI CERTIFICATE OF AUTHORITY: F0013950

STEVEN R. SCHULTZ PE-2001004664

SHAFER, KLINE & WARREN, INC.
3200 Penn Terrace, Suite 100, Columbia, MO 65202
573/442-4537 FAX 573/442-4543
OFFICE LOCATIONS: Chillicothe, MO Columbia, MO Houston, TX Iola, KS Kansas City, MO Lenexa, KS Macon, MO North Kansas City, MO Tulsa, OK
CIVIL ENGINEERS ELECTRICAL ENGINEERS MECHANICAL ENGINEERS STRUCTURAL ENGINEERS LAND PLANNERS ARCHITECTS LANDSCAPE ARCHITECTS LAND SURVEYORS

MoDOT - BOONVILLE MAINTENANCE FACILITY
TRUCK WASH IMPROVEMENTS

COVER SHEET

110195-010

SHEET NO.
C001

L:\110195-010_CAD\CIVIL\110195 C-TITLING
LAYOUT: C001 COVER SHEET
XREF DWG1: NONE
XREF DWG2: NONE
XREF DWG3: NONE
XREF DWG4: NONE
STY: JBRYAN
DATE: 5/10/2012

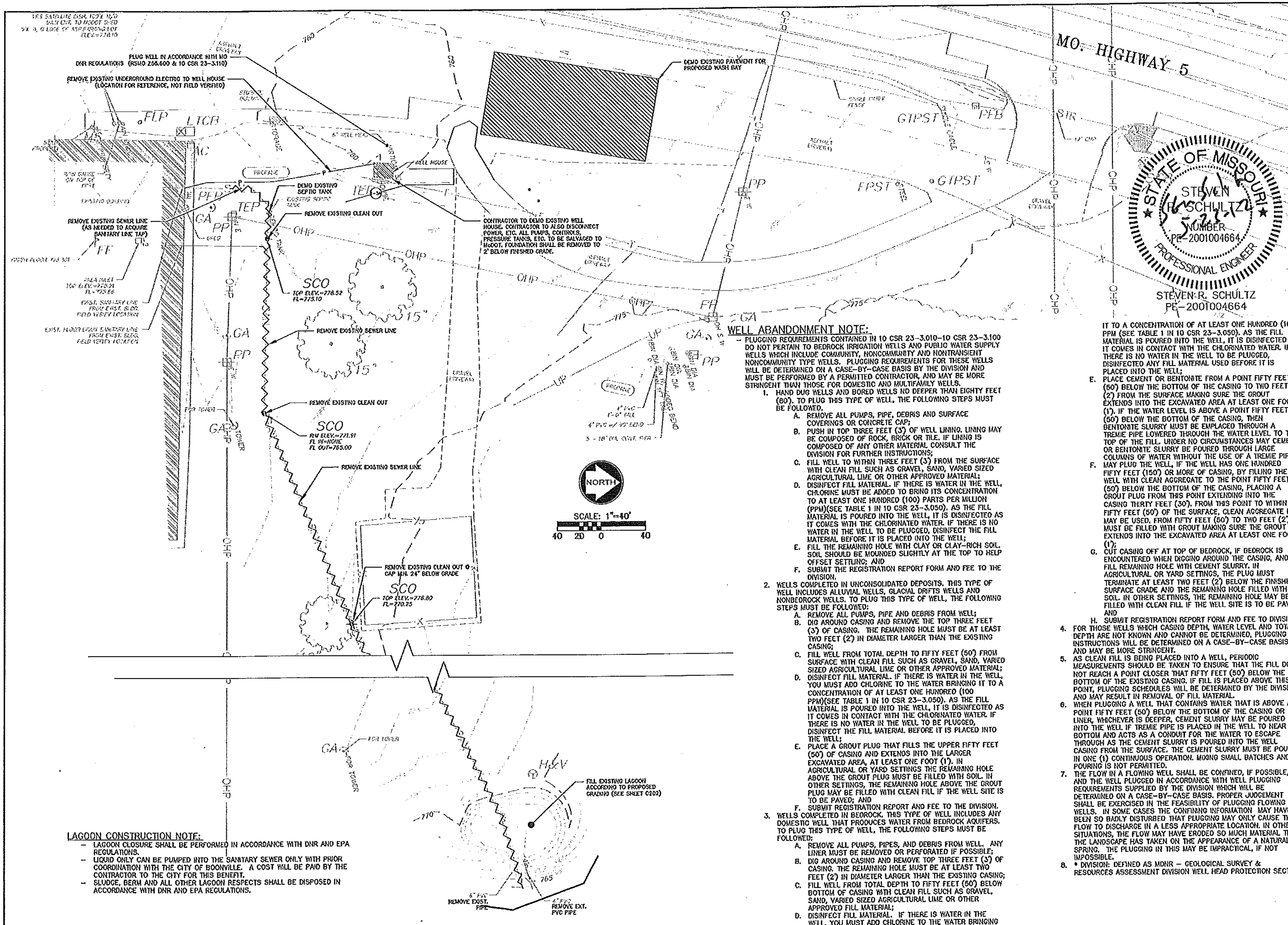

WELL ABANDONMENT NOTE:

- PLUGGING REQUIREMENTS CONTAINED IN 10 CSR 23-3.010-10 CSR 23-3.100 DO NOT PERTAIN TO BEDROCK IRRIGATION WELLS AND PUBLIC WATER SUPPLY WELLS WHICH INCLUDE COMMUNITY, NONCOMMUNITY AND NONTRANSIENT NONCOMMUNITY TYPE WELLS. PLUGGING REQUIREMENTS FOR THESE WELLS WILL BE DETERMINED ON A CASE-BY-CASE BASIS BY THE DIVISION AND MUST BE PERFORMED BY A PERMITTED CONTRACTOR, AND MAY BE MORE STRINGENT THAN THOSE FOR DOMESTIC AND MULTIFAMILY WELLS.

1. HAND DUG WELLS AND BORED WELLS NO DEEPER THAN EIGHTY FEET (80'). TO PLUG THIS TYPE OF WELL, THE FOLLOWING STEPS MUST BE FOLLOWED.
   - A. REMOVE ALL PUMPS, PIPE, DEBRIS AND SURFACE COVERINGS OR CONCRETE CAP;
   - B. PUSH IN TOP THREE FEET (3') OF WELL LINING. LINING MAY BE COMPOSED OF ROCK, BRICK OR TILE. IF LINING IS COMPOSED OF ANY OTHER MATERIAL CONSULT THE DIVISION FOR FURTHER INSTRUCTIONS;
   - C. FILL WELL TO WITHIN THREE FEET (3') FROM THE SURFACE WITH CLEAN FILL SUCH AS GRAVEL, SAND, VARIED SIZED AGRICULTURAL LIME OR OTHER APPROVED MATERIAL;
   - D. DISINFECT FILL MATERIAL. IF THERE IS WATER IN THE WELL, CHLORINE MUST BE ADDED TO BRING ITS CONCENTRATION TO AT LEAST ONE HUNDRED (100) PARTS PER MILLION (PPM)(SEE TABLE 1 IN 10 CSR 23-3.050). AS THE FILL MATERIAL IS POURED INTO THE WELL, IT IS DISINFECTED AS IT COMES WITH THE CHLORINATED WATER. IF THERE IS NO WATER IN THE WELL TO BE PLUGGED, DISINFECT THE FILL MATERIAL BEFORE IT IS PLACED INTO THE WELL;
   - E. FILL THE REMAINING HOLE WITH CLAY OR CLAY-RICH SOIL. SOIL SHOULD BE MOUNDED SLIGHTLY AT THE TOP TO HELP OFFSET SETTLING; AND
   - F. SUBMIT THE REGISTRATION REPORT FORM AND FEE TO THE DIVISION.
2. WELLS COMPLETED IN UNCONSOLIDATED DEPOSITS. THIS TYPE OF WELL INCLUDES ALLUVIAL WELLS, GLACIAL DRIFTS WELLS AND NONBEDROCK WELLS. TO PLUG THIS TYPE OF WELL, THE FOLLOWING STEPS MUST BE FOLLOWED:
   - A. REMOVE ALL PUMPS, PIPE AND DEBRIS FROM WELL;
   - B. DIG AROUND CASING AND REMOVE THE TOP THREE FEET (3') OF CASING. THE REMAINING HOLE MUST BE AT LEAST TWO FEET (2') IN DIAMETER LARGER THAN THE EXISTING CASING;
   - C. FILL WELL FROM TOTAL DEPTH TO FIFTY FEET (50') FROM SURFACE WITH CLEAN FILL SUCH AS GRAVEL, SAND, VARIED SIZED AGRICULTURAL LIME OR OTHER APPROVED MATERIAL;
   - D. DISINFECT FILL MATERIAL. IF THERE IS WATER IN THE WELL, YOU MUST ADD CHLORINE TO THE WATER BRINGING IT TO A CONCENTRATION OF AT LEAST ONE HUNDRED (100 PPM)(SEE TABLE 1 IN 10 CSR 23-3.050). AS THE FILL MATERIAL IS POURED INTO THE WELL, IT IS DISINFECTED AS IT COMES IN CONTACT WITH THE CHLORINATED WATER. IF THERE IS NO WATER IN THE WELL TO BE PLUGGED, DISINFECT THE FILL MATERIAL BEFORE IT IS PLACED INTO THE WELL;
   - E. PLACE A GROUT PLUG THAT FILLS THE UPPER FIFTY FEET (50') OF CASING AND EXTENDS INTO THE LARGER EXCAVATED AREA, AT LEAST ONE FOOT (1'). IN AGRICULTURAL OR YARD SETTINGS THE REMAINING HOLE ABOVE THE GROUT PLUG MUST BE FILLED WITH SOIL. IN OTHER SETTINGS, THE REMAINING HOLE ABOVE THE GROUT PLUG MAY BE FILLED WITH CLEAN FILL IF THE WELL SITE IS TO BE PAVED; AND
   - F. SUBMIT REGISTRATION REPORT AND FEE TO THE DIVISION.
3. WELLS COMPLETED IN BEDROCK. THIS TYPE OF WELL INCLUDES ANY DOMESTIC WELL THAT PRODUCES WATER FROM BEDROCK AQUIFERS. TO PLUG THIS TYPE OF WELL, THE FOLLOWING STEPS MUST BE FOLLOWED:
   - A. REMOVE ALL PUMPS, PIPES, AND DEBRIS FROM WELL. ANY LINER MUST BE REMOVED OR PERFORATED IF POSSIBLE;
   - B. DIG AROUND CASING AND REMOVE TOP THREE FEET (3') OF CASING. THE REMAINING HOLE MUST BE AT LEAST TWO FEET (2') IN DIAMETER LARGER THAN THE EXISTING CASING;
   - C. FILL WELL FROM TOTAL DEPTH TO FIFTY FEET (50') BELOW BOTTOM OF CASING WITH CLEAN FILL SUCH AS GRAVEL, SAND, VARIED SIZED AGRICULTURAL LIME OR OTHER APPROVED FILL MATERIAL;
   - D. DISINFECT FILL MATERIAL. IF THERE IS WATER IN THE WELL, YOU MUST ADD CHLORINE TO THE WATER BRINGING IT TO A CONCENTRATION OF AT LEAST ONE HUNDRED (100) PPM (SEE TABLE 1 IN 10 CSR 23-3.050). AS THE FILL MATERIAL IS POURED INTO THE WELL, IT IS DISINFECTED AS IT COMES IN CONTACT WITH THE CHLORINATED WATER. IF THERE IS NO WATER IN THE WELL TO BE PLUGGED, DISINFECTED ANY FILL MATERIAL USED BEFORE IT IS PLACED INTO THE WELL;
   - E. PLACE CEMENT OR BENTONITE FROM A POINT FIFTY FEET (50') BELOW THE BOTTOM OF THE CASING TO TWO FEET (2') FROM THE SURFACE MAKING SURE THE GROUT EXTENDS INTO THE EXCAVATED AREA AT LEAST ONE FOOT (1'). IF THE WATER LEVEL IS ABOVE A POINT FIFTY FEET (50') BELOW THE BOTTOM OF THE CASING, THEN BENTONITE SLURRY MUST BE EMPLACED THROUGH A TREMIE PIPE LOWERED THROUGH THE WATER LEVEL TO THE TOP OF THE FILL. UNDER NO CIRCUMSTANCES MAY CEMENT OR BENTONITE SLURRY BE POURED THROUGH LARGE COLUMNS OF WATER WITHOUT THE USE OF A TREMIE PIPE
   - F. MAY PLUG THE WELL, IF THE WELL HAS ONE HUNDRED FIFTY FEET (150') OR MORE OF CASING, BY FILLING THE WELL WITH CLEAN AGGREGATE TO THE POINT FIFTY FEET (50') BELOW THE BOTTOM OF THE CASING, PLACING A GROUT PLUG FROM THIS POINT EXTENDING INTO THE CASING THIRTY FEET (30'). FROM THIS POINT TO WITHIN FIFTY FEET (50') OF THE SURFACE, CLEAN AGGREGATE FILL MAY BE USED. FROM FIFTY FEET (50') TO TWO FEET (2') MUST BE FILLED WITH GROUT MAKING SURE THE GROUT EXTENDS INTO THE EXCAVATED AREA AT LEAST ONE FOOT (1');
   - G. CUT CASING OFF AT TOP OF BEDROCK, IF BEDROCK IS ENCOUNTERED WHEN DIGGING AROUND THE CASING, AND FILL REMAINING HOLE WITH CEMENT SLURRY. IN AGRICULTURAL OR YARD SETTINGS, THE PLUG MUST TERMINATE AT LEAST TWO FEET (2') BELOW THE FINISHED SURFACE GRADE AND THE REMAINING HOLE FILLED WITH SOIL. IN OTHER SETTINGS, THE REMAINING HOLE MAY BE FILLED WITH CLEAN FILL IF THE WELL SITE IS TO BE PAVED; AND
   - H. SUBMIT REGISTRATION REPORT FORM AND FEE TO DIVISION.
4. FOR THOSE WELLS WHICH CASING DEPTH, WATER LEVEL AND TOTAL DEPTH ARE NOT KNOWN AND CANNOT BE DETERMINED, PLUGGING INSTRUCTIONS WILL BE DETERMINED ON A CASE-BY-CASE BASIS AND MAY BE MORE STRINGENT.
5. AS CLEAN FILL IS BEING PLACED INTO A WELL, PERIODIC MEASUREMENTS SHOULD BE TAKEN TO ENSURE THAT THE FILL DOES NOT REACH A POINT CLOSER THAT FIFTY FEET (50') BELOW THE BOTTOM OF THE EXISTING CASING. IF FILL IS PLACED ABOVE THIS POINT, PLUGGING SCHEDULES WILL BE DETERMINED BY THE DIVISION AND MAY RESULT IN REMOVAL OF FILL MATERIAL.
6. WHEN PLUGGING A WELL THAT CONTAINS WATER THAT IS ABOVE A POINT FIFTY FEET (50') BELOW THE BOTTOM OF THE CASING OR LINER, WHICHEVER IS DEEPER, CEMENT SLURRY MAY BE POURED INTO THE WELL IF TREMIE PIPE IS PLACED IN THE WELL TO NEAR THE BOTTOM AND ACTS AS A CONDUIT FOR THE WATER TO ESCAPE THROUGH AS THE CEMENT SLURRY IS POURED INTO THE WELL CASING FROM THE SURFACE. THE CEMENT SLURRY MUST BE POURED IN ONE (1) CONTINUOUS OPERATION. MIXING SMALL BATCHES AND POURING IS NOT PERMITTED.
7. THE FLOW IN A FLOWING WELL SHALL BE CONFINED, IF POSSIBLE, AND THE WELL PLUGGED IN ACCORDANCE WITH WELL PLUGGING REQUIREMENTS SUPPLIED BY THE DIVISION WHICH WILL BE DETERMINED ON A CASE-BY-CASE BASIS. PROPER JUDGEMENT SHALL BE EXERCISED IN THE FEASIBILITY OF PLUGGING FLOWING WELLS. IN SOME CASES THE CONFINING INFORMATION MAY HAVE BEEN SO BADLY DISTURBED THAT PLUGGING MAY ONLY CAUSE THE FLOW TO DISCHARGE IN A LESS APPROPRIATE LOCATION. IN OTHER SITUATIONS, THE FLOW MAY HAVE ERODED SO MUCH MATERIAL THAT THE LANDSCAPE HAS TAKEN ON THE APPEARANCE OF A NATURAL SPRING. THE PLUGGING IN THIS MAY BE IMPRACTICAL, IF NOT IMPOSSIBLE.
8. * DIVISION: DEFINED AS MDNR – GEOLOGICAL SURVEY & RESOURCES ASSESSMENT DIVISION WELL HEAD PROTECTION SECT.

LAGOON CONSTRUCTION NOTE:

- LAGOON CLOSURE SHALL BE PERFORMED IN ACCORDANCE WITH DNR AND EPA REGULATIONS.
- LIQUID ONLY CAN BE PUMPED INTO THE SANITARY SEWER ONLY WITH PRIOR COORDINATION WITH THE CITY OF BOONVILLE. A COST WILL BE PAID BY THE CONTRACTOR TO THE CITY FOR THIS BENEFIT.
- SLUDGE, BERM AND ALL OTHER LAGOON RESPECTS SHALL BE DISPOSED IN ACCORDANCE WITH DNR AND EPA REGULATIONS.

NO.	DATE	REVISIONS	BY	APP'D
5				
4	4.25.2012	NEW SET	JMB	SRS
3	11.08.2011	CITY COMMENTS	JMB	MMH
2	9.21.2011	MoDOT COMMENTS	JMB	MMH
1	9.01.2011	MoDOT COMMENTS	JMB	MMH

COPYRIGHT © - 2011 - SHAFER, KLINE & WARREN INC.
MISSOURI CERTIFICATE OF AUTHORITY: F00139850

Designed By: SRS
Drawn By: JMB
Checked By: PFB
Issue Date: 10.3.2011

SHAFER, KLINE & WARREN, INC.
3200 Penn Terrace, Suite 100, Columbia, MO 65202
573/442-4537 FAX: 573/442-4543

MoDOT – BOONEVILLE MAINTENANCE FACILITY TRUCK WASH IMPROVEMENTS

DEMOLITION PLAN

110195-010

SHEET NO.
C100

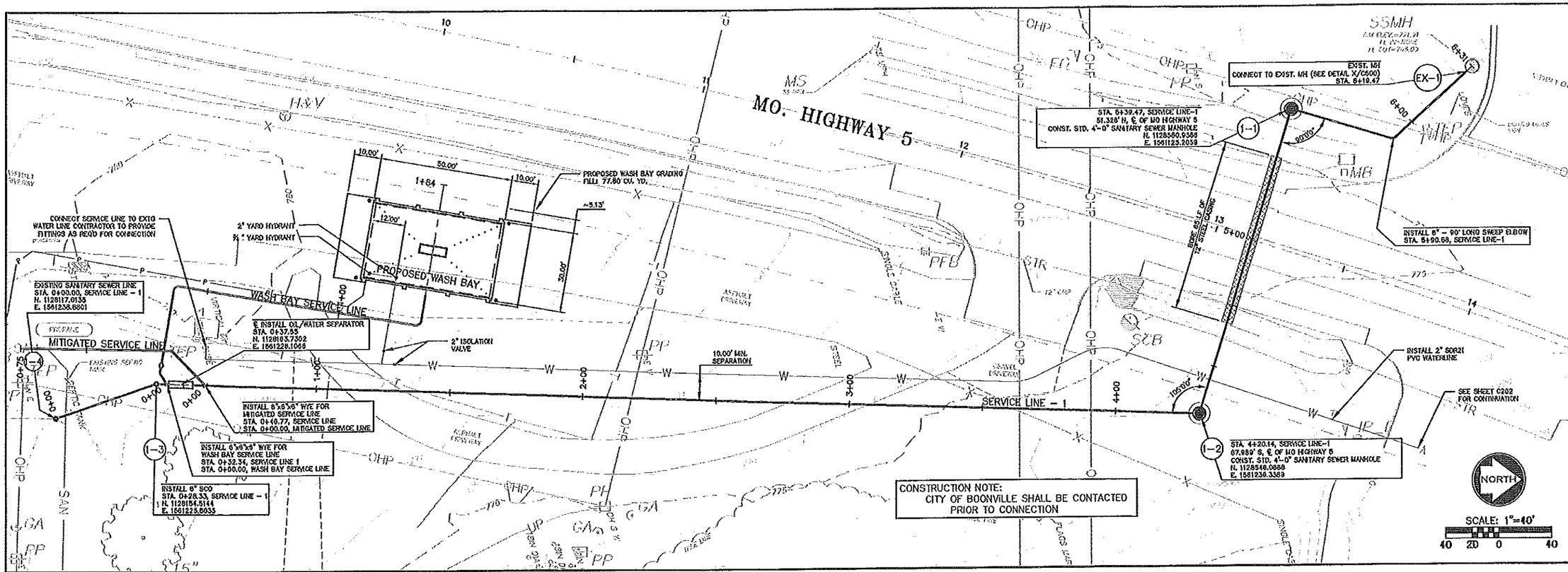

SANITARY SEWER SERVICE LINE - 1

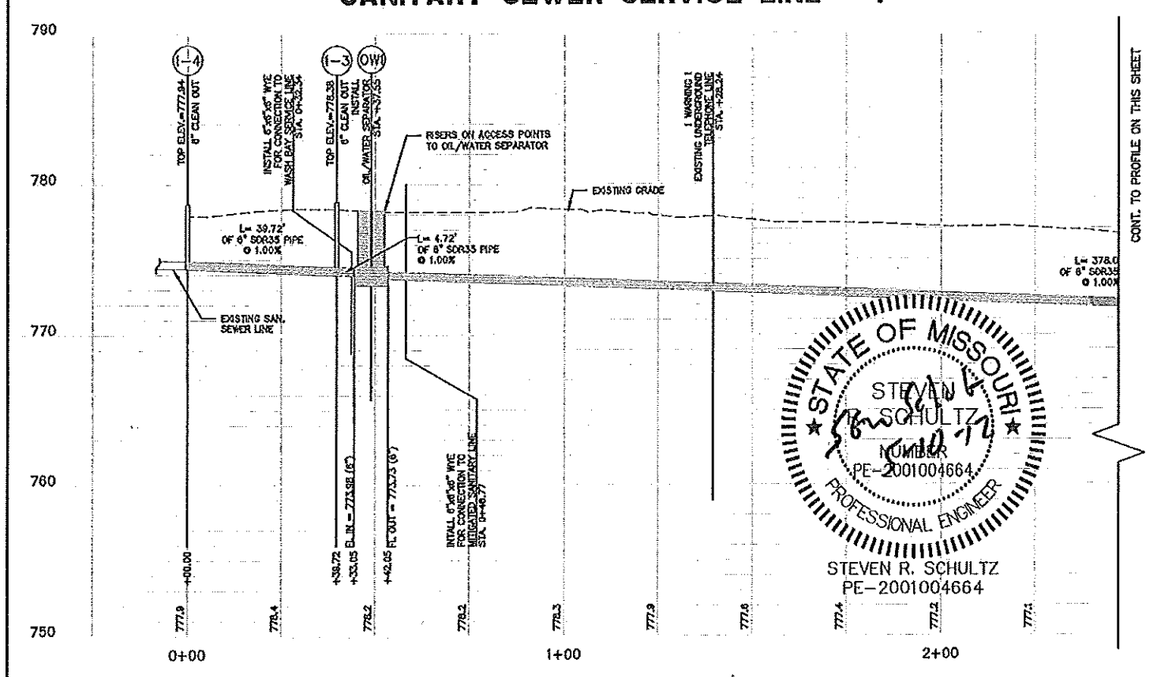

CONT. TO PROFILE ON THIS SHEET

CONT. TO PROFILE ON THIS SHEET

SANITARY SEWER SERVICE LINE - 1 (cont.)

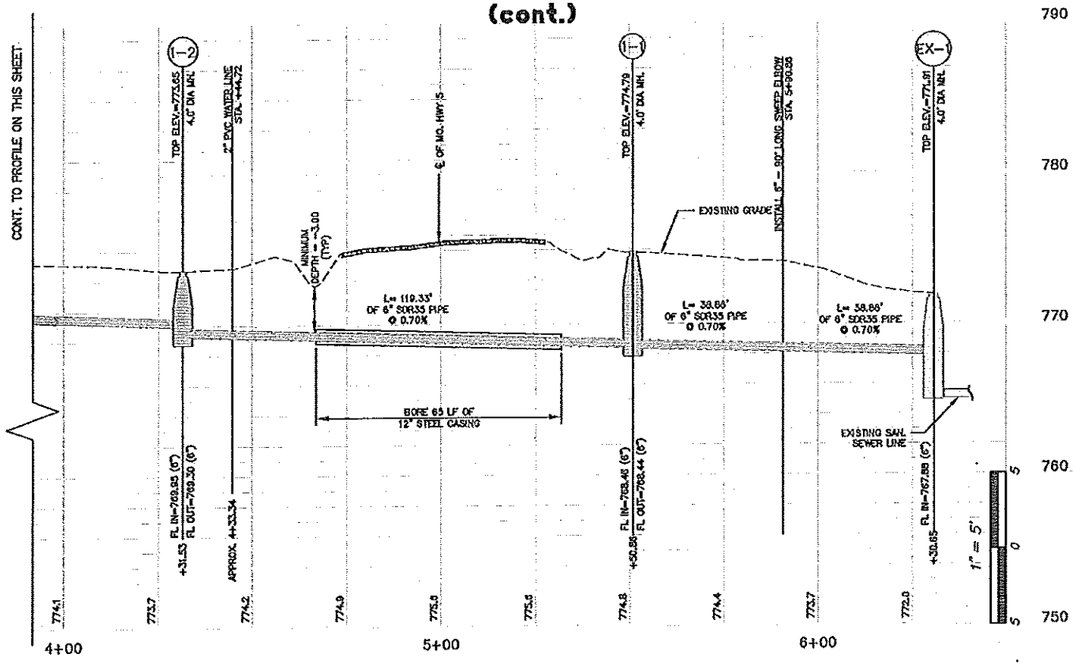

STATE OF MISSOURI
STEVEN R. SCHULTZ
NUMBER PE-2001004664
PROFESSIONAL ENGINEER
STEVEN R. SCHULTZ
PE-2001004664

NO.	DATE	REVISIONS	BY	APP'D
5				
4	4.25.2012	NEW SET	JAG	SRS
3	11.08.2011	CITY COMMENTS	JAG	MJH
2	9.21.2011	MoDOT COMMENTS	JAG	MJH
1	9.01.2011	MoDOT COMMENTS	JAG	MJH

Designed By: SRS
Drawn By: JMB
Checked By: PRB
Issue Date: 10.3.2011

COPYRIGHT © - 2011 - SHAFER, KLINE & WARREN INC.

MISSOURI CERTIFICATE OF AUTHORITY: F001399850

STEVEN R. SCHULTZ
PE-2001004664

SHAFER, KLINE & WARREN, INC.
3200 Penn Terrace, Suite 100, Columbia, MO 65202
573/442-4537 FAX: 573/442-4543
OFFICE LOCATIONS:
Chillicothe, MO
Columbia, MO
Houston, TX
Iola, KS
Kansas City, MO
Lenexa, KS
Macon, MO
North Kansas City, MO
Tulsa, OK
CIVIL ENGINEERS ELECTRICAL ENGINEERS MECHANICAL ENGINEERS STRUCTURAL ENGINEERS LANDSCAPE ARCHITECTS LAND SURVEYORS LAND PLANNERS

MoDOT - BOONVILLE MAINTENANCE FACILITY
TRUCK WASH IMPROVEMENTS

SANITARY SEWER PLAN & PROFILE

110195-010

SHEET NO.
C200

L:\110195-010_DWG\CIVIL\110195-C-SAP-01.DWG
LAYOUT: C200 UTILITY & GRADING PLAN | BY: JBRYAN | DATE: 5/10/2012
XREF DWG1: NONE | XREF DWG2: NONE
XREF DWG3: NONE | XREF DWG4: NONE

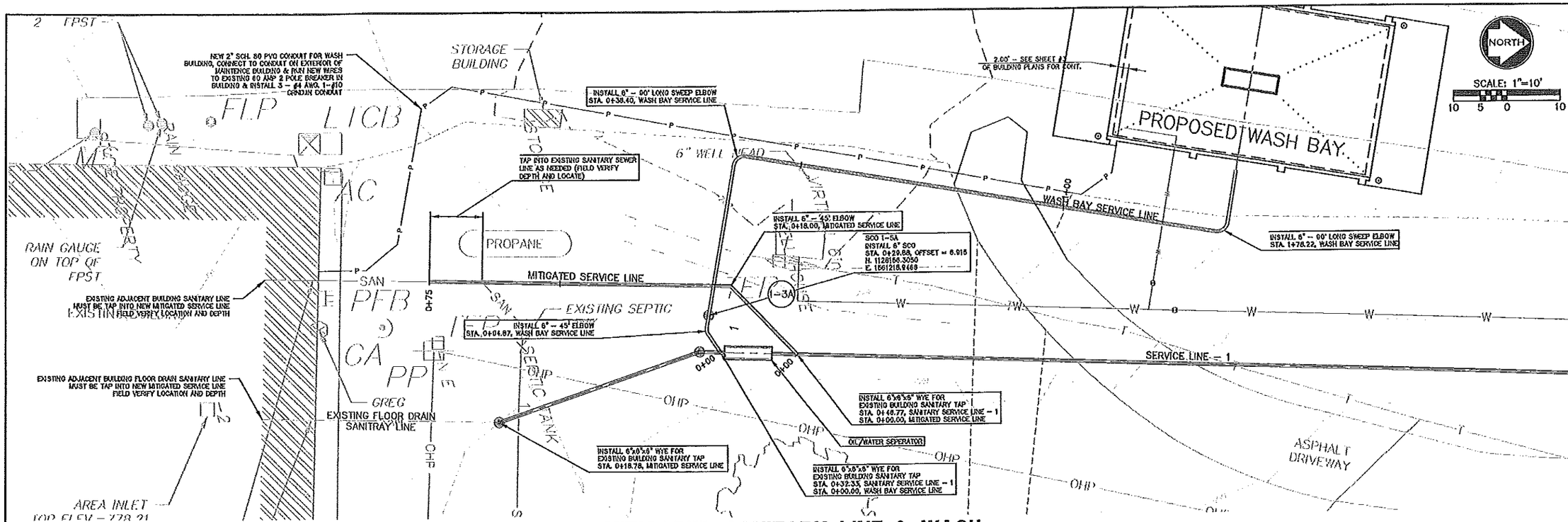

MITIGATED SANITARY LINE & WASH BAY SERVICE LINE PLAN

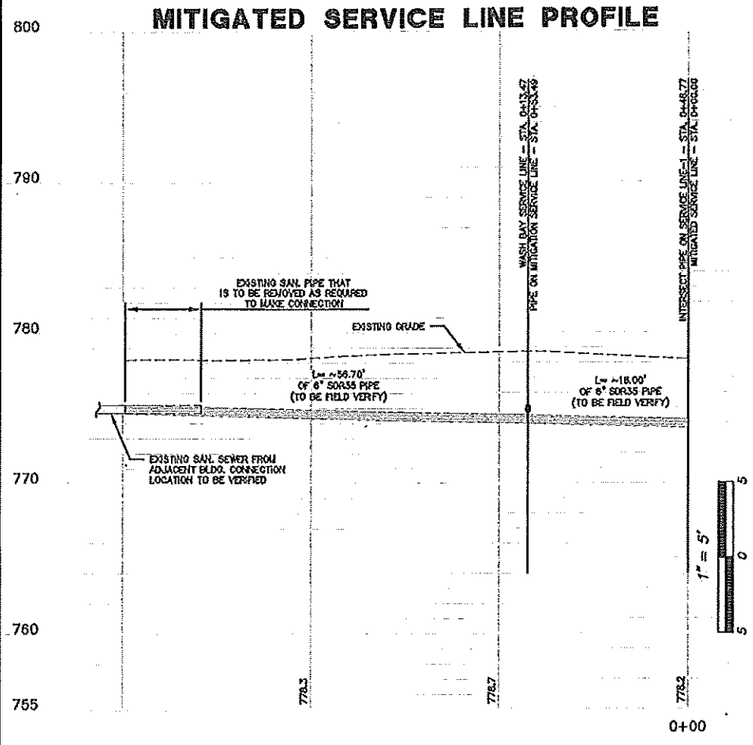

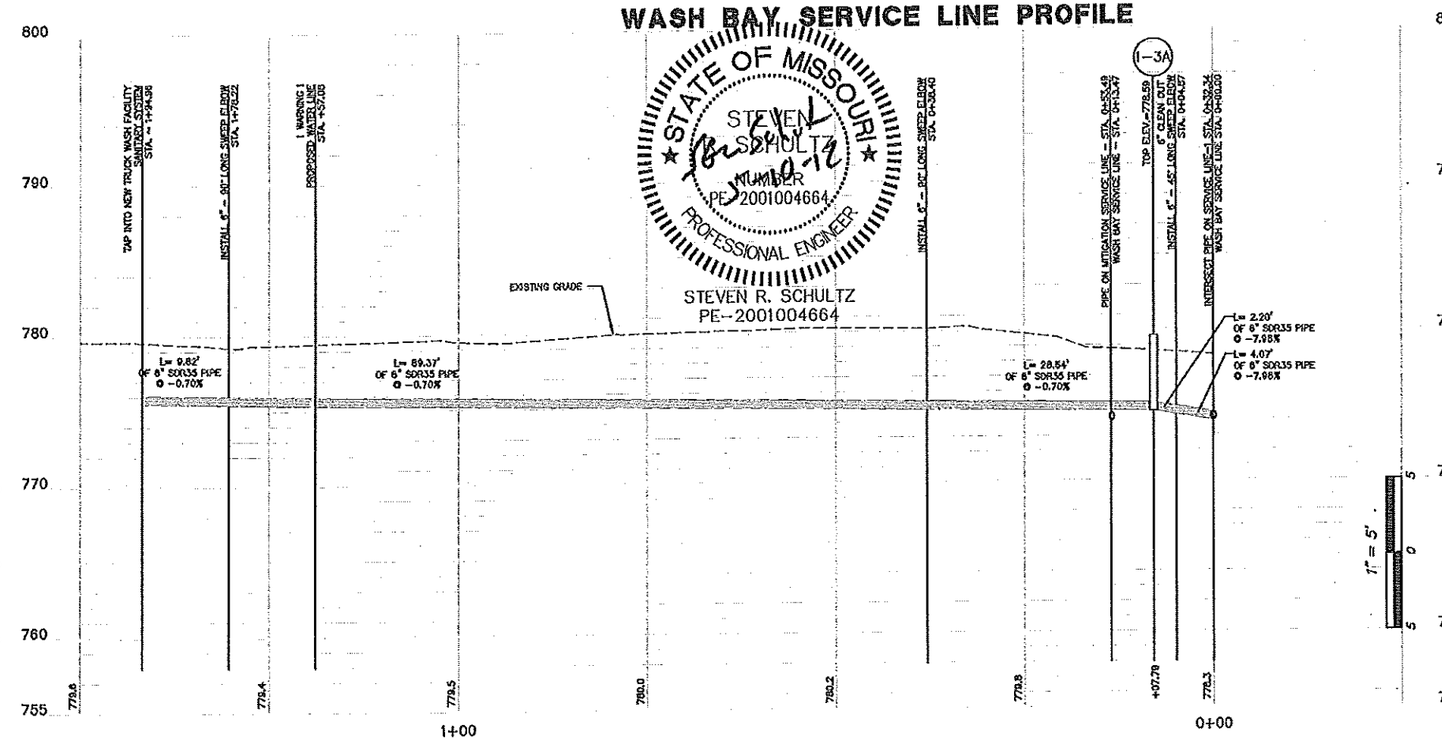

STATE OF MISSOURI
STEVEN R. SCHULTZ
NUMBER PE-2001004664
PROFESSIONAL ENGINEER
STEVEN R. SCHULTZ
PE--2001004664

NO.	DATE	REVISIONS	BY	APP'D
5			JMB	SRS
4	4.25.2012	NEW SET	JMB	MAH
3	11.08.2011	CITY COMMENTS	JMB	MAH
2	9.21.2011	MoDOT COMMENTS	JMB	MAH
1	9.01.2011	MoDOT COMMENTS	JMB	MAH

Designed By: SRS
Drawn By: JMB
Checked By: PFB
Issue Date: 10.3.2011

COPYRIGHT © – 2011 – SHAFER, KLINE & WARREN INC.
MISSOURI CERTIFICATE OF AUTHORITY: F001398SO

STEVEN R. SCHULTZ
PE-2001004664

SHAFER, KLINE & WARREN, INC.
3200 Penn Terrace, Suite 100, Columbia, MO 65202
573/442-4557 FAX: 573/442-4543

OFFICE LOCATIONS:
Chillicothe, MO
Columbia, MO
Houston, TX
Iola, KS
Kansas City, MO
Lenexa, KS
Macon, MO
North Kansas City, MO
Tulsa, OK

CIVIL ENGINEERS ELECTRICAL ENGINEERS MECHANICAL ENGINEERS STRUCTURAL ENGINEERS LANDSCAPE ARCHITECTS LAND SURVEYORS

MoDOT – BOONEVILLE MAINTENANCE FACILITY
TRUCK WASH IMPROVEMENTS

SANITARY SEWER PLAN & PROFILE

110195-010
SHEET NO.
C201

L:\110195-010_CADD\CIVIL\110195-C-SAP-01.DWG
LAYOUT: C201 SANITARY SEWER PLAN & PROFILE | BY: JBRYAN | DATE: 5/10/2012
XREF DWG1: NONE | XREF DWG2: NONE
XREF DWG3: NONE | XREF DWG4: NONE

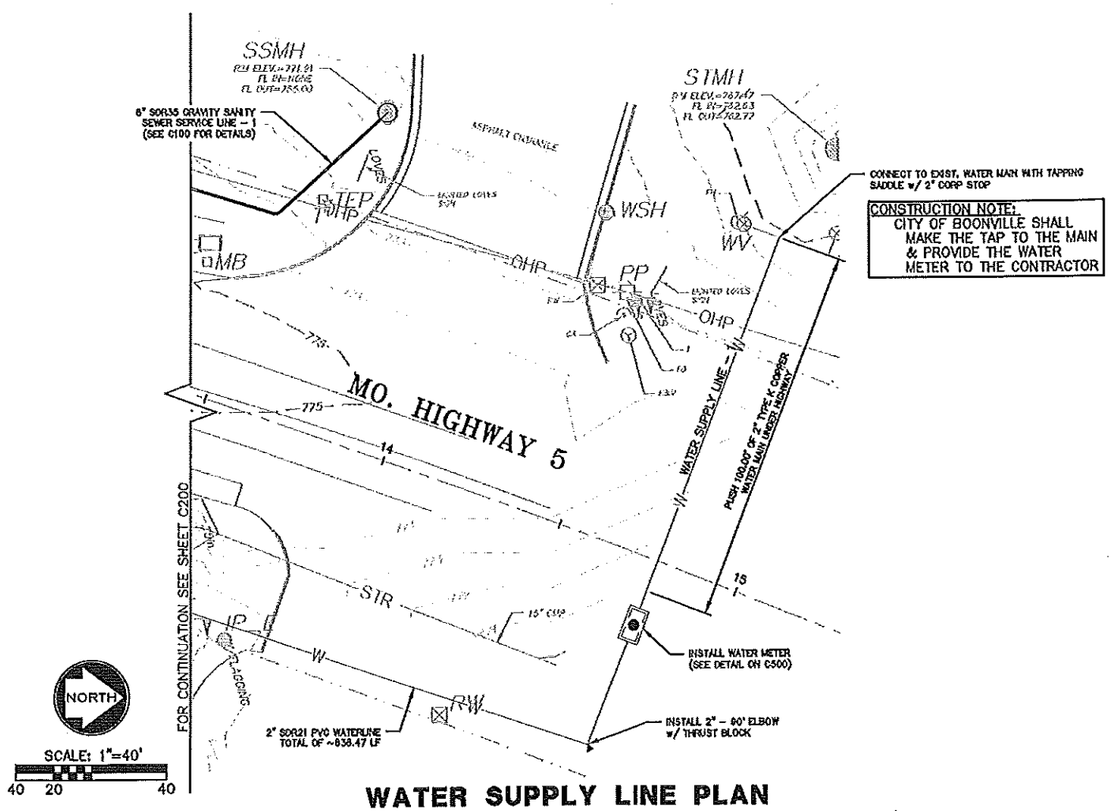

WATER SUPPLY LINE PLAN

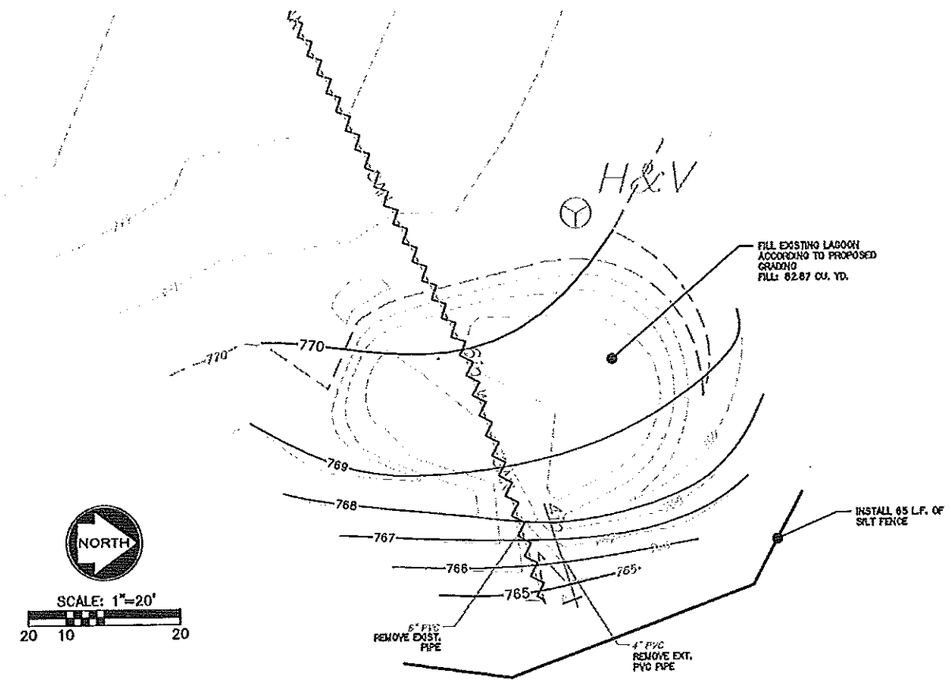

EXISTING LAGOON GRADING PLAN

LAGOON CONSTRUCTION NOTE:

- LAGOON CLOSURE SHALL BE PERFORMED IN ACCORDANCE WITH DNR AND EPA REGULATIONS.
- LIQUID ONLY CAN BE PUMPED INTO THE SANITARY SEWER ONLY WITH PRIOR COORDINATION WITH THE CITY OF BOONVILLE. A COST WILL BE PAID BY THE CONTRACTOR TO THE CITY FOR THIS BENEFIT.
- SLUDGE, BERM AND ALL OTHER LAGOON RESPECTS SHALL BE DISPOSED IN ACCORDANCE WITH DNR AND EPA REGULATIONS.

STATE OF MISSOURI
STEVEN R. SCHULTZ
NUMBER PE-2001004664
PROFESSIONAL ENGINEER
5-24-12

STEVEN R. SCHULTZ
PE--2001004664

NO.	DATE	REVISIONS	BY	APP'D
5				
4	4.25.2012	NEW SET	JMB	SRS
3	11.08.2011	CITY COMMENTS	JMB	MAN
2	9.21.2011	MoDOT COMMENTS	JMB	MAN
1	9.01.2011	MoDOT COMMENTS	JMB	MAN

Designed By: SRS
Drawn By: JMB
Checked By: PFB
Issue Date: 10.3.2011

COPYRIGHT © - 2011 - SHAFER, KLINE & WARREN INC.
MISSOURI CERTIFICATE OF AUTHORITY: F0139850

STEVEN R. SCHULTZ
05-24-2012

SHAFER, KLINE & WARREN, INC.
3200 Penn Terrace, Suite 100, Columbia, MO 65202
573/442-4537 FAX: 573/442-4543
OFFICE LOCATIONS:
Chillicothe, MO
Columbia, MO
Houston, TX
Iola, KS
Kansas City, MO
Lenexa, KS
Macon, MO
North Kansas City, MO
Tulsa, OK
CIVIL ENGINEERS ELECTRICAL ENGINEERS MECHANICAL ENGINEERS STRUCTURAL ENGINEERS LANDSCAPE ARCHITECTS LAND SURVEYORS

MoDOT – BOONEVILLE MAINTENANCE FACILITY
TRUCK WASH IMPROVEMENTS

UTILITY & GRADING PLAN

110195-010
SHEET NO.
C202

L:\110195-010_CAD\CIVIL\110195-C-SAP-01.DWG
LAYOUT: C202 UTILITY AND GRADING PLAN
BY: JBRYAN
DATE: 5/23/2012
XREF DWG1: NONE
XREF DWG2: NONE
XREF DWG3: NONE
XREF DWG4: NONE

NOTES: PIPE INSTALLATION/BEDDING (FORCEMAIN)

1) PIPE SHALL BE BURIED TO A MINIMUM DEPTH OF 36" TO THE TOP OF THE MAIN LINE AND SERVICES

2) PVC PIPE SHALL BE SLIP JOINT SDR35 AND SHALL MEET REQUIREMENTS OF ASTM 2241. JOINTS SHALL BE 20' IN LENGTH UNLESS PREAPPROVED BY THE ENGINEER

3) ALL CHANGES IN THE MAIN LINE DIRECTION GREATER THAN 11.25° SHALL BE ACCOMPLISHED USING STANDARD FITTINGS

5) TRACER WIRE SHALL BE TYPE UF, #12 SOLID CONDUCTOR

6) TRACER WIRE SHALL BE INSTALLED WITH ALL MAIN LINES AND SERVICE LINES

TRENCH WIDTH			
PIPE SIZE (INCHES)	MIN. TRENCH WIDTH IN EARTH (INCHES)	MAX. TRENCH WIDTH IN EARTH (INCHES)	MIN. TRENCH WIDTH IN ROCK (INCHES)
< 4	20	26	20
4 – 6	24	30	24
8	26	32	24
10	30	34	24
12	32	36	26

NOTE:
WHEN ANY TRENCH IS AT EDGE OF PAVEMENT, BACKFILL TRENCH WITH COMPACTED ROLL STONE BASE ROCK, AFTER BEDDING.

NOTE:
FOR GRAVITY SEWERS, GRANULAR BEDDING TYPICALLY TO EXTEND 6" ABOVE SEWER MAIN, AND FOR TRENCH DEPTHS OF 17' OR GREATER, GRANULAR BEDDING TO EXTEND 24" ABOVE SEWER MAIN.

INSIDE PIPE DIAMETER	DIMENSION "A" EARTH EXCAVATION	DIMENSION "A" ROCK EXCAVATION
4"	4"	7"
6"	4"	7"
8"	4"	7"
12"	6"	9"
16"	6"	9"
24"	9"	12"
36"	12"	15"

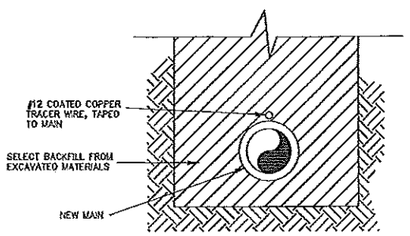

EXCAVATE AND REPLACE SOFT OR UNSUITABLE TRENCH BOTTOM AND REPLACE WITH GRANULAR EMBEDMENT MATERIAL OR GRANULAR BACKFILL MATERIAL, AS REQUIRED BY THE EARTHWORK SPECIFICATIONS.

NON-PAVED AND NON-GRAVELED SURFACE AREA (FORCEMAIN)
N.T.S.

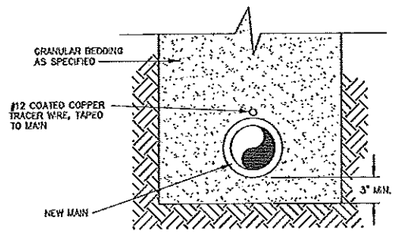

IN DRIVING SURFACES (FORCEMAIN)
N.T.S.

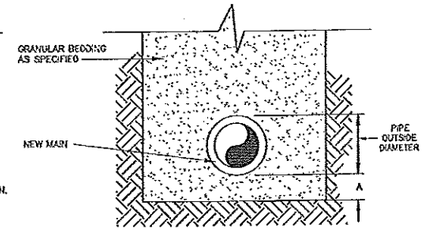

GRAVITY SEWER (ALL SURFACES)
N.T.S.

TYPICAL PIPE INSTALLATION/BEDDING DETAILS

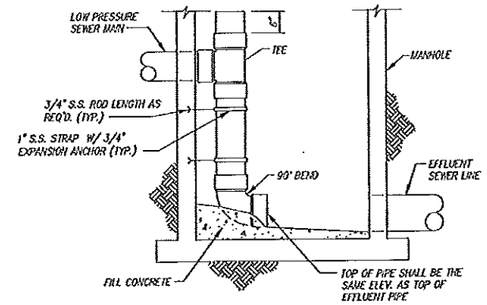

LOW PRESSURE SEWER MAIN CONNECTION AT MANHOLE
NO SCALE

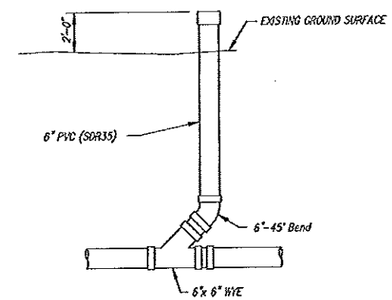

TYPICAL CLEAN OUT DETAIL
(GRAVITY SEWER)
NO SCALE

STATE OF MISSOURI
STEVEN R. SCHULTZ
NUMBER
PE-2001004664
PROFESSIONAL ENGINEER

STEVEN R. SCHULTZ
PE--2001004664

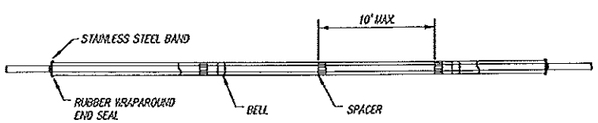

PLAN

DIAMETER

CARRIER PIPE	2"	3"	4"	6"	8"
STEEL NOMINAL CASING DIAMETER	6"	6"	8"	10"	14"
STEEL WALL CASING THICKNESS	.188"	.188"	.188"	.188"	.188"
PVC – SDR35 NOMINAL CASING DIAMETER	6"	6"	8"	10"	15"
POLYETHYLENE	6"	6"	8"	10"	15"

NOTES: CASING, CASING SPACERS, AND END SEAL DETAIL

1) CASING SPACER AND END SEALS SHALL BE USED ON ALL ENCASED CROSSINGS.

2) CASING SPACERS SHALL BE SPACED A MAXIMUM OF 10' APART ON 10" AND SMALLER CARRIER PIPE, AND 5' APART ON 12" AND LARGER CARRIER PIPE. INSTALL A SPACER AT EACH BELL OF THE CARRIER PIPE AND AT EACH END OF THE CASING PIPE.

3) END SEALS SHALL BE PLACED AT EACH END OF THE CASING PIPE.

4) CASING SPACERS TO BE PSI RANGER SERIES A2, CZK HIGH DENSITY POLYETHYLENE FOR PVC, AND POLYETHYLENE CASING AND SBG-2 304 STAINLESS STEEL FOR STEEL CASING; OR APPROVED EQUAL. CASING SPACERS TO BE CENTERED/RESTRAINED WITH POLYETHYLENE RUNNERS.

5) END SEAL TO BE PSI MODEL W WITH STAINLESS STEEL BANDS OR APPROVED EQUAL. END SEALS TO BE RUBBER WRAPAROUND TYPE.

NOTE: VERIFY PIPE & CASING CLEARANCE FOR TYPE OF PIPES USED

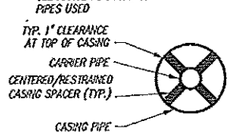

SECTION

CASING, CASING SPACERS, AND END SEALS
NO SCALE

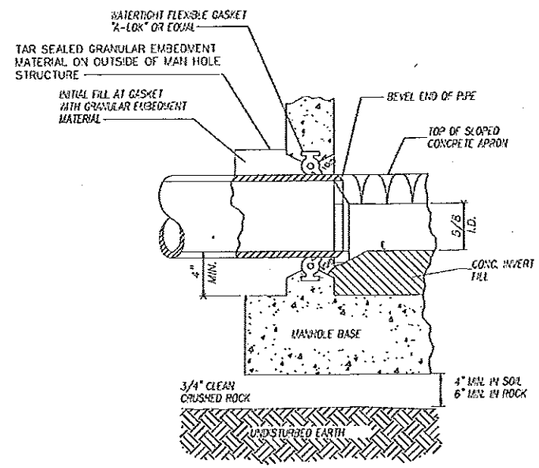

NOTE:
1. BITUMINOUS COATING ON EXTERIOR SURFACE OF MANHOLE SHALL NOT COME IN CONTACT WITH PIPE GASKET.
2. FOR CAST-IN-PLACE CONCRETE MANHOLES OR PRE-CAST WITH BOX-OUTS, THE PIPE GASKET SHALL BE A RUBBER LABYRINTH WATERSTOP WITH STAINLESS STEEL CLAMPING BANDS LOCATED AT CENTER OF WALL AND THE SPACE BETWEEN PIPE & WALL COMPLETELY GROUTED WITH NON-SHRINKING MORTAR.
3. PIPE MAY PROJECT 1" MAXIMUM PAST INSIDE WALL OF MANHOLE, BUT NO CONTACT BETWEEN PIPE & INVERT.

MANHOLE GASKET DETAIL

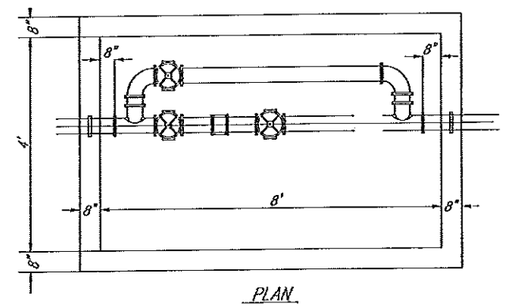

PLAN

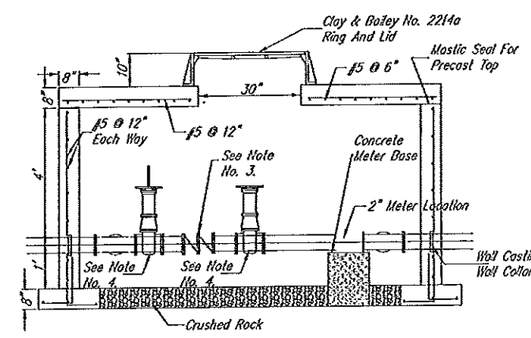

SECTION

BACKFLOW PREVENTER & METER PIT WITH BYPASS
NTS

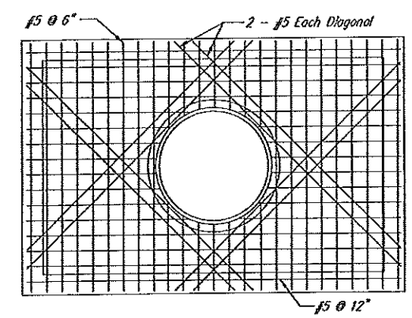

ROOF SLAB
NOT FOR VEHICULAR TRAFFIC LOADS

NOTES:
1. Pour Footing On Firm Undisturbed Earth.
2. All Piping In Meter Pit Shall Be D.I.P.
3. Backflow Prevention Assembly Shall Be AMES Model 4000ss Or Approved Equal.
4. Valves Shall Be Gate Type. Bypass Valve Shall Be O.S. & Y.

NO.	DATE	REVISIONS	BY	APP'D
5			JAB	SRS
4	4.25.2012	NEW SET	JAB	MAH
3	11.08.2011	CITY COMMENTS	JAB	MAH
2	9.21.2011	MoDOT COMMENTS	JAB	MAH
1	9.01.2011	MoDOT COMMENTS	JAB	MAH

Designed By: SRS
Drawn By: JMB
Checked By: PFB
Issue Date: 10.3.2011

COPYRIGHT © - 2011 - SHAFER, KLINE & WARREN INC.
MISSOURI CERTIFICATE OF AUTHORITY: F001398SO

STEVEN R. SCHULTZ
PE-2001004664

SHAFER, KLINE & WARREN, INC.
3200 Penn Terrace, Suite 100, Columbia, MO 65202
573/442-4537 FAX: 573/442-4543
OFFICE LOCATIONS:
Chillicothe, MO
Columbia, MO
Houston, TX
Iola, KS
Kansas City, MO
Lenexa, KS
Macon, MO
North Kansas City, MO
Tulsa, OK
CIVIL ENGINEERS ELECTRICAL ENGINEERS MECHANICAL ENGINEERS STRUCTURAL ENGINEERS LANDSCAPE ARCHITECTS LAND SURVEYORS LAND PLANNERS

MoDOT – BOONEVILLE MAINTENANCE FACILITY
TRUCK WASH IMPROVEMENTS

CONSTRUCTION DETAILS

110195-010
SHEET NO.
C500

L:\110195-010_CAD\CIVIL\110195-C-DET-01.DWG
LAYOUT: C500 CONSTRUCTION DETAILS | BY: JBRYAN | DATE: 5/10/2012
XREF DWG1: NONE | XREF DWG2: NONE
XREF DWG3: NONE | XREF DWG4: NONE

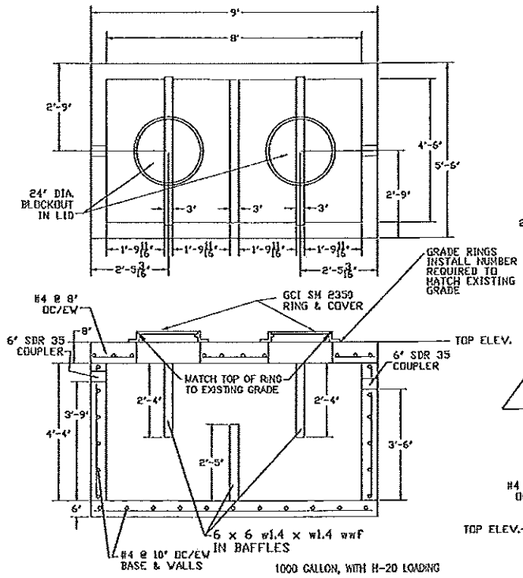

OIL/WATER SEPARATOR

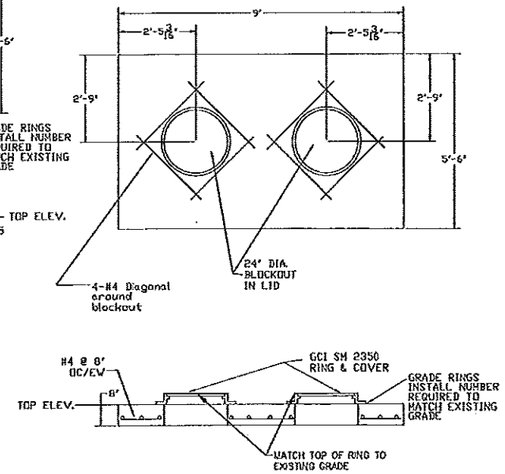

OIL/WATER SEPARATOR TOP

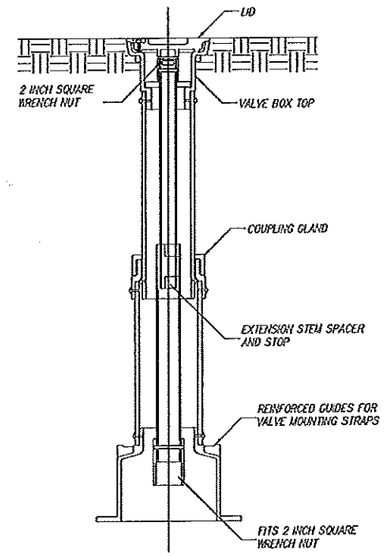

ADJUSTABLE VALVE BOX DETAIL

STATE OF MISSOURI
STEVEN R. SCHULTZ
NUMBER PE-2001004664
PROFESSIONAL ENGINEER
5/10/12

STEVEN R. SCHULTZ
PE--2001004664

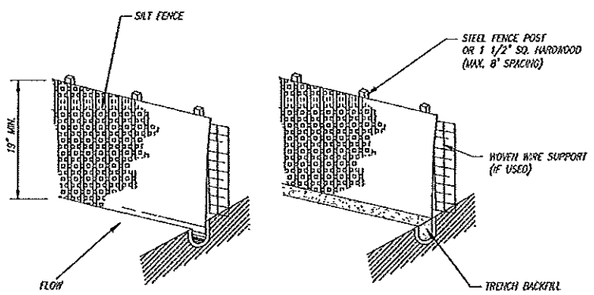

CONSTRUCTION SPECIFICATIONS:

1. POSTS WHICH SUPPORT THE SILT FENCE SHALL BE INSTALLED ON A SLIGHT ANGLE TOWARD THE ANTICIPATED RUNOFF SOURCE AND SPACED AT A MAX. 8' APART OR TO SILT FENCE MANUFACTURER SPECIFICATIONS, WHICHEVER IS STRICTER.
2. SILT FENCE SHALL BE TRENCHED IN WITH A SPADE OR MECHANICAL TRENCHER SO THAT THE DOWNSLOPE FACE OF THE TRENCH IS FLAT AND PERPENDICULAR TO THE LINE OF FLOW.
3. THE TRENCH SHOULD BE A MINIMUM OF 6" DEEP 3-4" WIDE TO ALLOW FOR THE SILT FENCE TO BE LAID IN THE GROUND AND BACKFILLED.
4. SILT FENCE SHOULD BE SECURELY FASTENED TO EACH SUPPORT POST OR TO WOVEN WIRE WHICH IS IN TURN ATTACHED TO THE FENCE POSTS.
5. INSPECTION SHALL BE FREQUENT AND REPAIR OR REPLACEMENT SHALL BE MADE PROMPTLY AS NEEDED.
6. SILT FENCE SHALL BE REMOVED WHEN IT HAS SERVED ITS USEFULNESS SO AS NOT TO BLOCK OR IMPEDE STORM FLOW OR DRAINAGE.
7. SEDIMENT TRAPPED BY THIS PRACTICE SHALL BE UNIFORMLY DISTRIBUTED ON THE SOURCE AREA PRIOR TO TOPSOILING.
8. SILT FENCE SHALL BE MIRAFI-100X FILTER FABRIC OR APPROVED EQUAL.

SILT FENCE DETAIL
NO SCALE

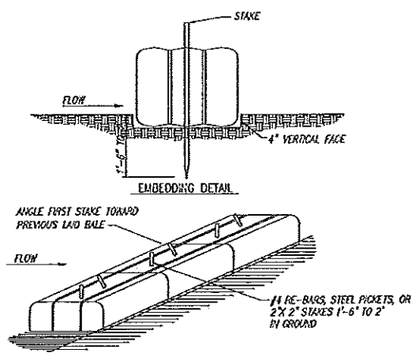

EMBEDDING DETAIL

ANCHORING DETAIL

NOTES:

1. BALES SHALL BE PLACED IN A ROW WITH ENDS TIGHTLY ABUTTING THE ADJACENT BALES.
2. EACH BALE SHALL BE EMBEDDED IN THE SOIL A MINIMUM OF 4".
3. BALES SHALL BE SECURELY ANCHORED IN PLACE BY STAKES OR RE-BARS DRIVEN THROUGH THE BALES. THE FIRST STAKE IN EACH BALE SHALL BE ANGLED TOWARD PREVIOUSLY LAID BALE TO FORCE BALES TOGETHER.
4. INSPECTION SHALL BE FREQUENT AND REPAIR OR REPLACEMENT SHALL BE MADE PROMPTLY AS NEEDED.
5. BALES SHALL BE REMOVED WHEN THEY HAVE SERVED THEIR USEFULNESS SO AS NOT TO BLOCK OR IMPEDE STORM FLOW OR DRAINAGE BY THE OWNER.

STRAW BALE DIKE DETAIL
NO SCALE

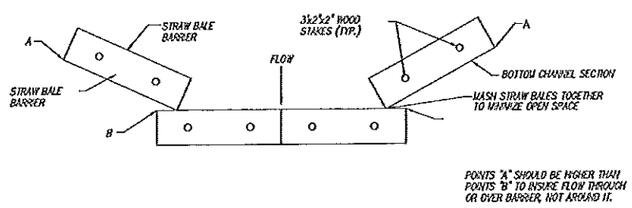

POINTS "A" SHOULD BE HIGHER THAN POINTS "B" TO INSURE FLOW THROUGH OR OVER BARRIER, NOT AROUND IT.

TOP VIEW DITCH APPLICATION DETAILS

DITCH CHECK SPACING			
DITCH ℄ SLOPE %	SPACING (FT)	DITCH ℄ SLOPE %	SPACING (FT)
.05	400	5.5	38
1.0	200	6.0	35
1.5	133	6.5	30
2.0	100	7.0	28
2.5	80	7.5	26
3.0	66	8.0	25
3.5	57	8.5	23
4.0	50	9.0	22
4.5	44	9.5	21
5.0	40	10.0	20

TEMPORARY STRAW BALE DITCH CHECK
NO SCALE

NOTES:

1. THE EROSION CONTROL FEATURES AND NOTES SHOWN ON THIS SHEET REPRESENT THE MINIMUM REQUIREMENTS ACCEPTABLE. LOCATIONS ARE TYPICAL AND MAY VARY ACCORDING TO CONTRACTORS STAGING AND LIMITS OF CONSTRUCTION.
2. IT SHALL BE EACH CONTRACTOR'S RESPONSIBILITY TO CONTROL EROSION AND PREVENT POLLUTION FOR ALL WORK WHICH THEY ARE DIRECTLY INVOLVED.
3. IT SHALL BE EACH CONTRACTORS RESPONSIBILITY TO PLACE ADDITIONAL CONTROL DEVICES AS REQUIRED DURING CONSTRUCTION TO PREVENT SILT LOSS FROM THE SITE. IT SHALL ALSO BE EACH CONTRACTOR'S RESPONSIBILITY TO MAINTAIN THEIR EROSION CONTROL FEATURES IN PROPER WORKING CONDITION UNTIL THE SITE IS STABILIZED BY PAVEMENT, VEGETATION OR OTHER MEANS.
4. WHEN POSSIBLE, WITHOUT ADVERSELY AFFECTING CONSTRUCTION OPERATIONS, THE CONTRACTOR SHALL: MINIMIZE THE AMOUNT OF SURFACE AREA WHICH IS EXPOSED AT ONE TIME, LEAVE GRADED AREAS WITH A ROUGH TEXTURE, CONSTRUCT TEMPORARY TERRACES DURING GRADING OPERATIONS, AND LIMIT UNNECESSARY VEHICLE TRAFFIC IN GRADED AREAS.
5. THE SPILLAGE OF DEBRIS, INCLUDING THE TRACKING OF SOIL, OUTSIDE OF THE CONSTRUCTION LIMITS SHALL BE AVOIDED.
6. STRAW BALE DIKES OR SILT FENCES SHALL BE PLACED ON A CONTOUR ELEVATION ALONG THE DOWNHILL SIDE AND FOR THE FULL EXTENT OF THE DISTURBED AREAS WITHIN THE CONSTRUCTION LIMITS. THE LAST FIVE FEET ON EACH END OF RUN OF SILT FENCE/STRAW BALE DIKE SHALL BE PLACED FACING UPHILL AT 90 DEGREES TO THE CONTOUR LINE.
7. THE CONTRACTOR SHALL PREVENT SILT AND SEDIMENT FROM ENTERING THE STORM SEWER SYSTEM. STRAW BALE DIKES SHALL BE PLACED AROUND ALL STORM SEWER INLETS EXCEPT DURING CONSTRUCTION OPERATIONS WHICH REQUIRE THEIR REMOVAL.
8. CONTRACTOR SHALL INSPECT THEIR EROSION CONTROL DEVICES AFTER ALL RAINFALL EVENTS TO INSURE THEY ARE WORKING PROPERLY. THE CONTRACTOR SHALL ALSO INSPECT THE SITE AFTER ALL RAINFALL EVENTS AND ON A PERIODIC BASIS TO ASSESS THE NEED AND IF PRUDENT, INSTALL ADDITIONAL EROSION CONTROL DEVICES AS REQUIRED.
9. ALL AREAS UPON REACHING FINAL GRADE SHALL BE BROUGHT TO FINAL PLAN CONDITION (PAVED, MULCHED AND SEEDED, SODDED, OR OTHER) AS SOON AS POSSIBLE.

NO.	DATE	REVISIONS	BY	APP'D
5				
4	4.25.2012	NEW SET	JMB	SRS
3	11.08.2011	CITY COMMENTS	JMB	MAH
2	9.21.2011	MoDOT COMMENTS	JMB	MAH
1	9.01.2011	MoDOT COMMENTS	JMB	MAH

Designed By: SRS
Drawn By: JMB
Checked By: PFB
Issue Date: 10.3.2011

COPYRIGHT © - 2011 - SHAFER, KLINE & WARREN INC.
MISSOURI CERTIFICATE OF AUTHORITY: F001139850

STEVEN R. SCHULTZ PE-2001004664

SHAFER, KLINE & WARREN, INC.
3200 Penn Terrace, Suite 100, Columbia, MO 65202
573/442-4537 FAX: 573/442-4543
OFFICE LOCATIONS:
Chillicothe, MO
Columbia, MO
Houston, TX
Macon, MO
North Kansas City, MO
Tulsa, OK
Iola, KS
Kansas City, MO
Lenexa, KS
CIVIL ENGINEERS ELECTRICAL ENGINEERS MECHANICAL ENGINEERS STRUCTURAL ENGINEERS LANDSCAPE ARCHITECTS LAND SURVEYORS LAND PLANNERS

MoDOT - BOONEVILLE MAINTENANCE FACILITY
TRUCK WASH IMPROVEMENTS

CONSTRUCTION DETAILS

110195-010
SHEET NO.
C501

L:\110195-010_CAD\DWG\110195-C-DET-01.DWG
LAYOUT: C501
BY: JSRYAN
DATE: 5/10/2012
XREF DWG1: NONE
XREF DWG2: NONE
XREF DWG3: NONE
XREF DWG4: NONE

INDEX OF DRAWINGS

1 – 15 COVER SHEET
2 – 15 PLOT PLAN
3 – 15 FLOOR PLAN – BASE BID
4 – 15 FLOOR PLAN – ALTERNATE #1
5 – 15 FOUNDATION DETAILS
6 – 15 FOUNDATION DETAILS
7 – 15 BUILDING SECTION – BASE BID
8 – 15 BUILDING SECTION – ALTERNATE #1
9 – 15 DETAILS
10 – 15 WEST ELEVATION – BASE BID
11 – 15 WEST ELEVATION – ALTERNATE #1
12 – 15 EAST ELEVATION – BASE BID
13 – 15 EAST ELEVATION – ALTERNATE #1
14 – 15 GENERAL NOTES
15 – 15 MECHANICAL PLAN – ALTERNATE #1

MISSOURI DEPARTMENT OF TRANSPORTATION

CONCRETE BLOCK TRUCK WASH
CENTRAL DISTRICT
BOONVILLE, MISSOURI

Route 5, 0.3 Miles South of I–70
Cooper County

CODE REQUIREMENTS

BUILDING CODE – CURRENT IBC
PLUMBING CODE – CURRENT IBC
ELECTRICAL BY OTHERS

STATE OF MISSOURI
DOUGLAS A. RECORD
NUMBER A-2009002624
ARCHITECT

Douglas A. Record
6/4/12

DATE: 10-14-11

Concrete Block Truck Wash
Central District
Boonville, Missouri

MISSOURI DEPARTMENT OF TRANSPORTATION
DIVISION OF GENERAL SERVICES
FACILITIES MANAGEMENT

COVER SHEET

Sheet 1 of 15

REFER TO SHAFER, KLINE & WARREN, INC.
SANITARY SEWER PLAN & PROFILE SHEET.

STATE OF MISSOURI
DOUGLAS A. RECORD
NUMBER A-2009002624
ARCHITECT

Douglas A. Record
6/4/12

DRAWN BY: DAVIDSON
CHECKED BY: DOUG RECORD
DATE: 10-24-11

Concrete Block Truck Wash
Central District
Boonville, Missouri

MISSOURI DEPARTMENT OF TRANSPORTATION
DIVISION OF GENERAL SERVICES
FACILITIES MANAGEMENT

PLOT PLAN

Sheet 2 of 15

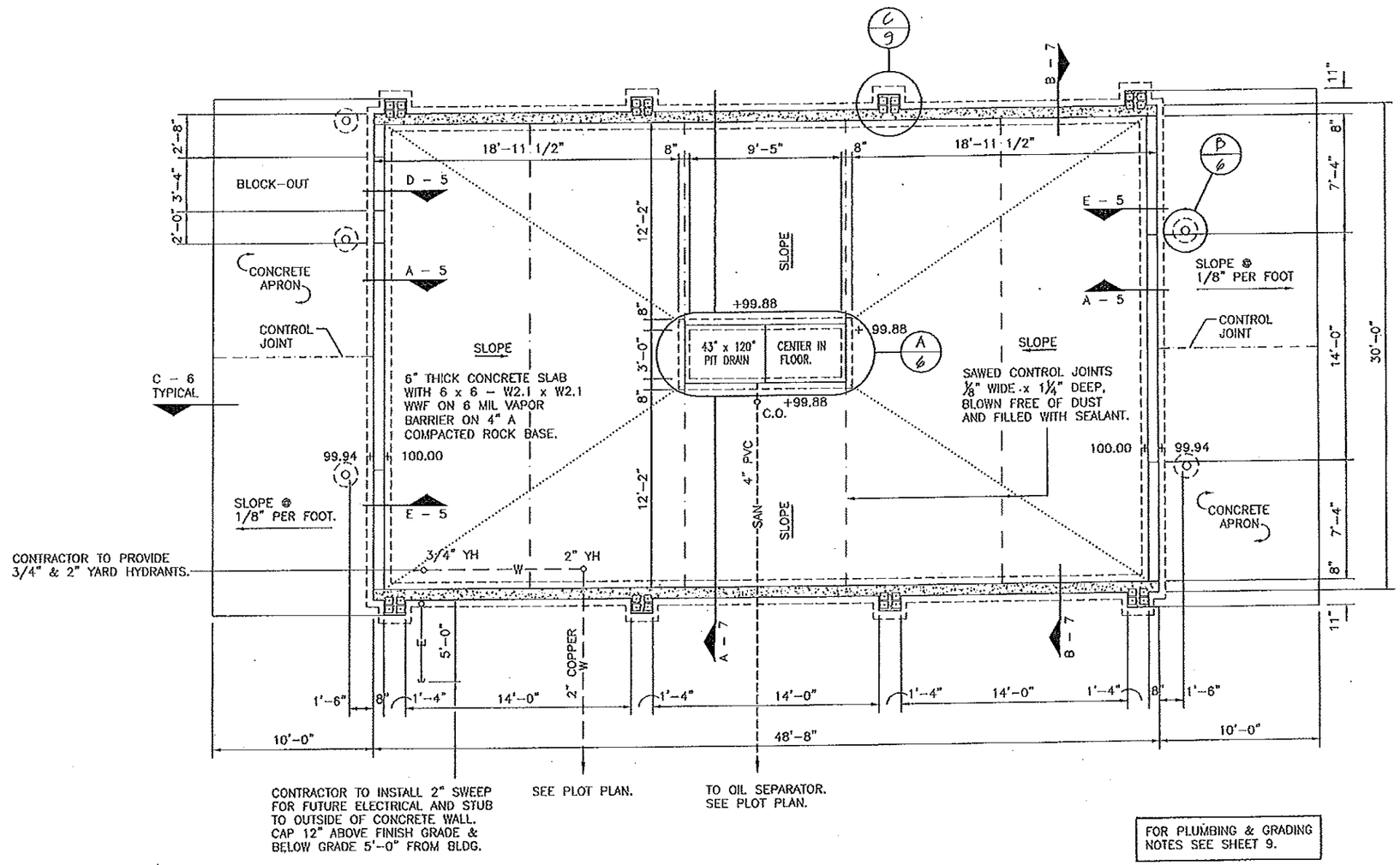

FOR PLUMBING & GRADING NOTES SEE SHEET 9.

A/3 BASE BID FLOOR PLAN

SCALE: 1/8" = 1' - 0"

N

STATE OF MISSOURI
DOUGLAS A. RECORD
NUMBER A-2009002624
ARCHITECT

6/4/12

DATE 10-14-11

Concrete Block Truck Wash
Central District
Boonville, Missouri

MISSOURI DEPARTMENT OF TRANSPORTATION
DIVISION OF GENERAL SERVICES
FACILITIES MANAGEMENT

Floor Plan - Base Bid

Sheet 3 of 15

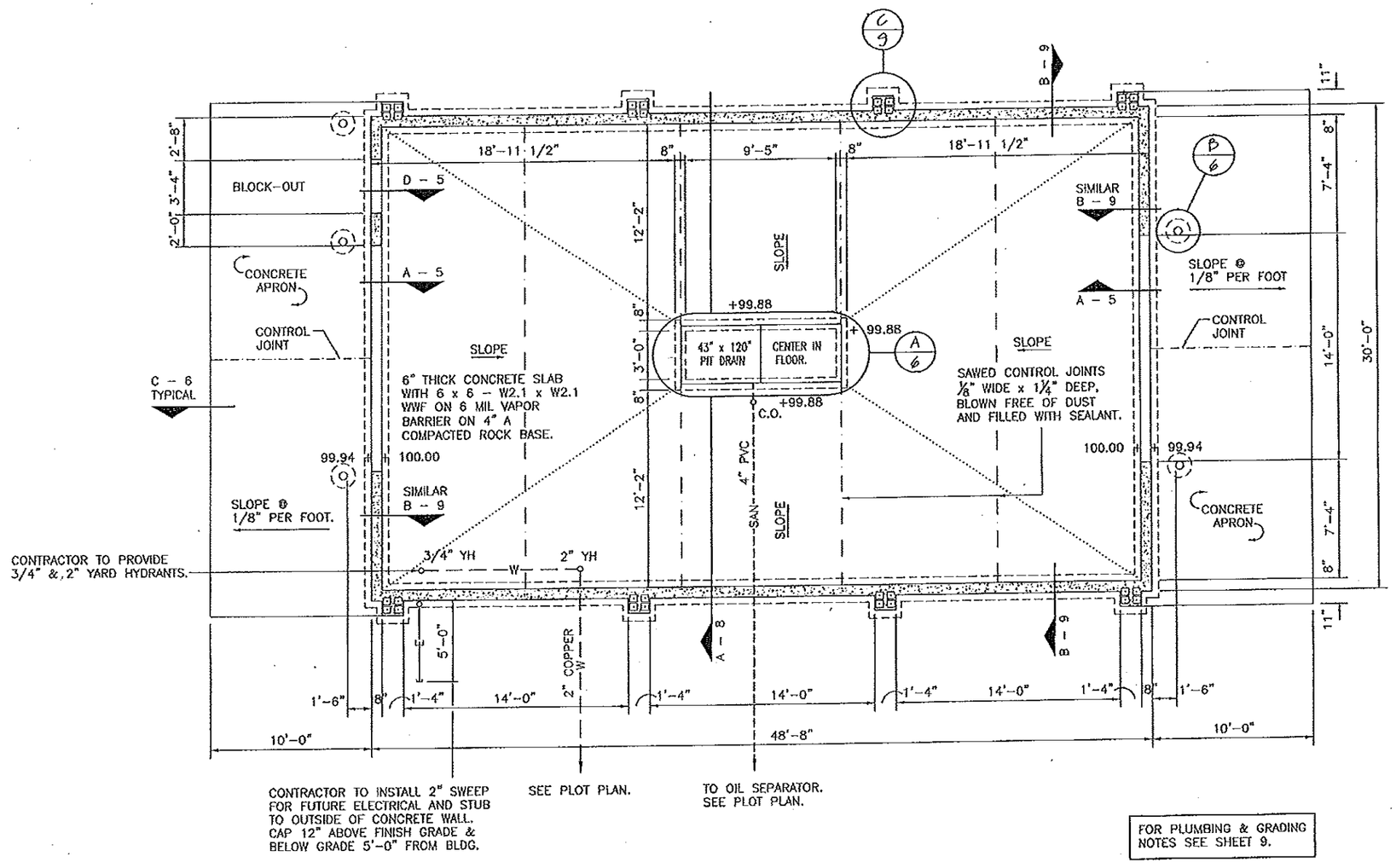

FOR PLUMBING & GRADING NOTES SEE SHEET 9.

A/4 ALTERNATE #1 FLOOR PLAN
SCALE: ⅛" = 1' - 0"

STATE OF MISSOURI
DOUGLAS A. RECORD
NUMBER A-2009002624
ARCHITECT

Douglas A. Record
6/4/12

CHECKED BY: DOUG RECORD
DATE: 10-14-11

Concrete Block Truck Wash
Central District
Boonville, Missouri

MISSOURI DEPARTMENT OF TRANSPORTATION
DIVISION OF GENERAL SERVICES
FACILITIES MANAGEMENT

Floor Plan - Alternate #1

Sheet 4 of 15

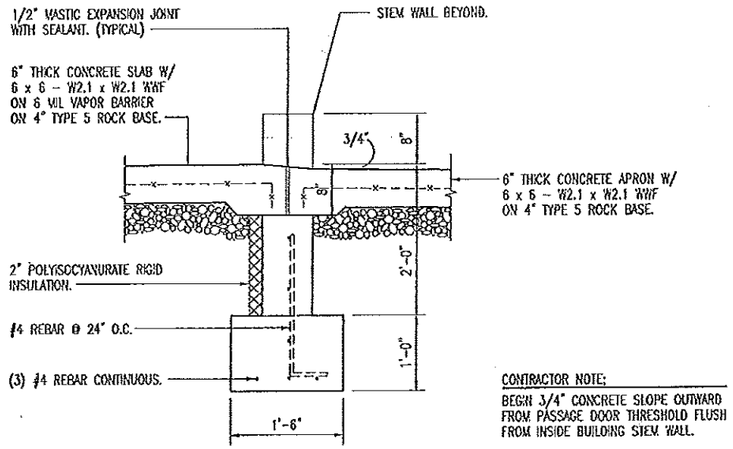

CONTRACTOR NOTE:
BEGIN 3/4" CONCRETE SLOPE OUTWARD FROM PASSAGE DOOR THRESHOLD FLUSH FROM INSIDE BUILDING STEM WALL.

D/5 PASSAGE DOOR THRESHOLD
SCALE: 1/2" = 1' – 0"

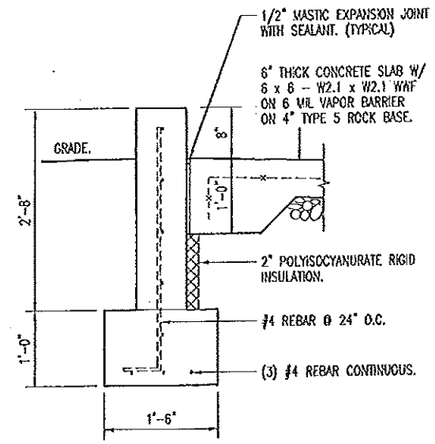

E/5 STEM WALL
SCALE: 1/2" = 1' – 0"

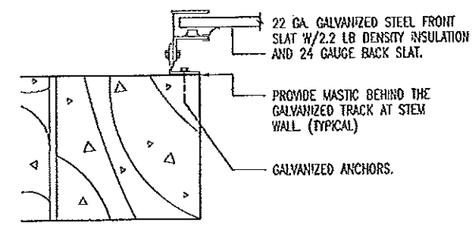

COILING ALT. #1
F/5 GARAGE DOOR JAMB
SCALE: 1-1/2" = 1' – 0"

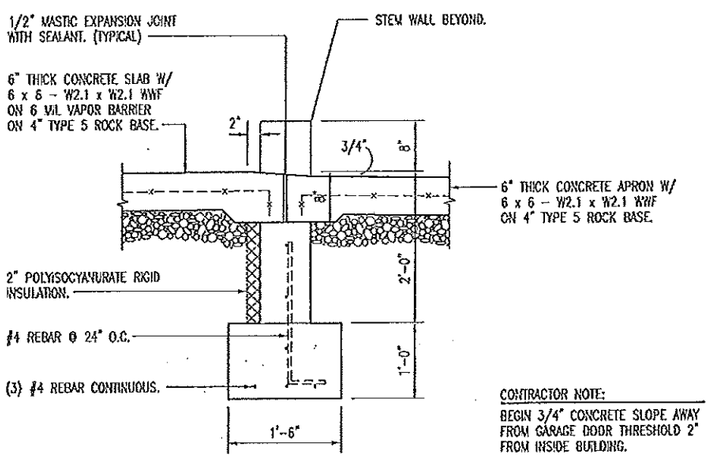

CONTRACTOR NOTE:
BEGIN 3/4" CONCRETE SLOPE AWAY FROM GARAGE DOOR THRESHOLD 2" FROM INSIDE BUILDING.

A/5 GARAGE DOOR THRESHOLD
SCALE: 1/2" = 1' – 0"

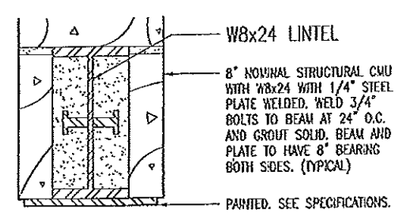

GARAGE DOOR ALT. #1
B/5 HEAD
SCALE: 1-1/2" = 1' – 0"

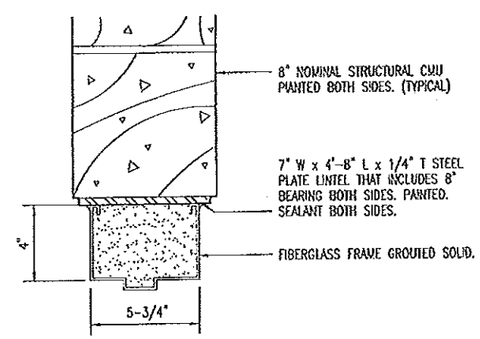

FIBERGLASS DOOR ALT. #1
C/5 HEAD/JAMB @ 2'
SCALE: 1-1/2" = 1' – 0"

STATE OF MISSOURI
DOUGLAS A. RECORD
NUMBER A-2009002624
ARCHITECT

Douglas A. Record
6/4/12

CHECKED BY: DOUG RECORD
DATE: 10-14-11

Concrete Block Truck Wash
Central District
Boonville, Missouri

MISSOURI DEPARTMENT OF TRANSPORTATION
DIVISION OF GENERAL SERVICES
FACILITIES MANAGEMENT

FOUNDATION DETAILS

Sheet 5 of 15

STATE OF MISSOURI
DOUGLAS A. RECORD
NUMBER A-2009002624
ARCHITECT

6/4/12

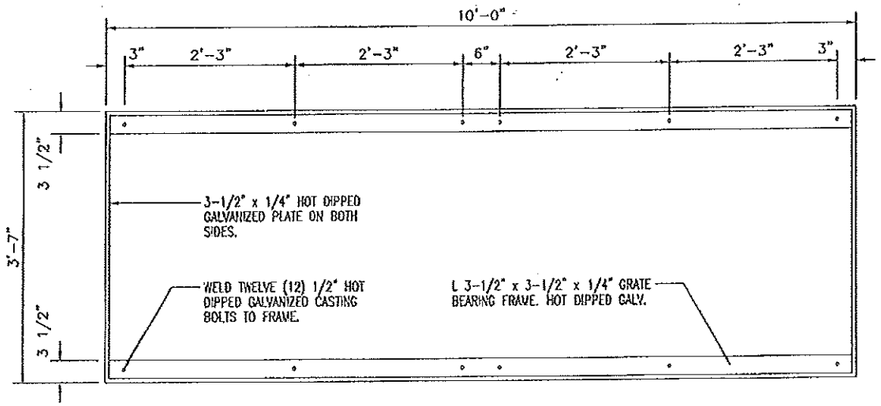

BEARING FRAME PLAN

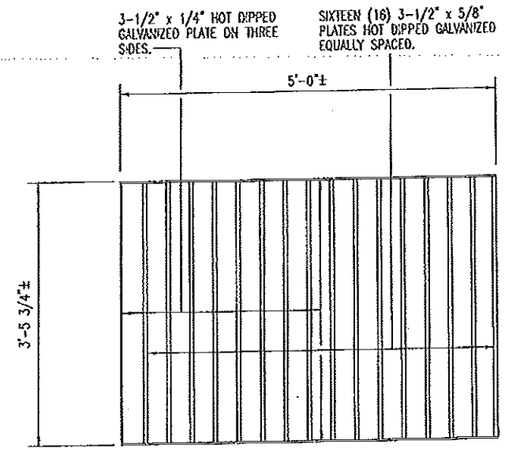

PROVIDE TWO (2) GRATE PLAN

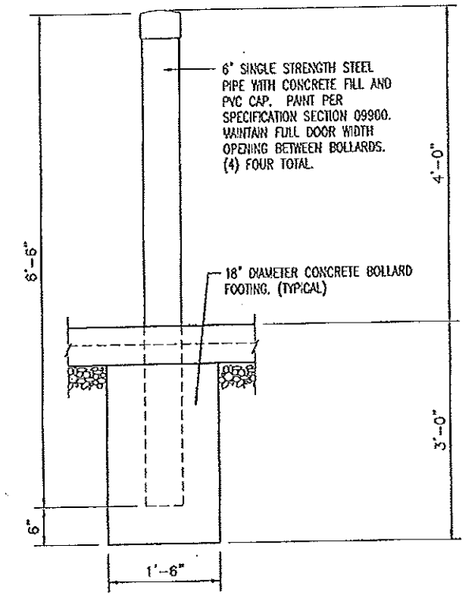

B / 6 BOLLARD @ PIER DETAIL
SCALE: ½" = 1' - 0"

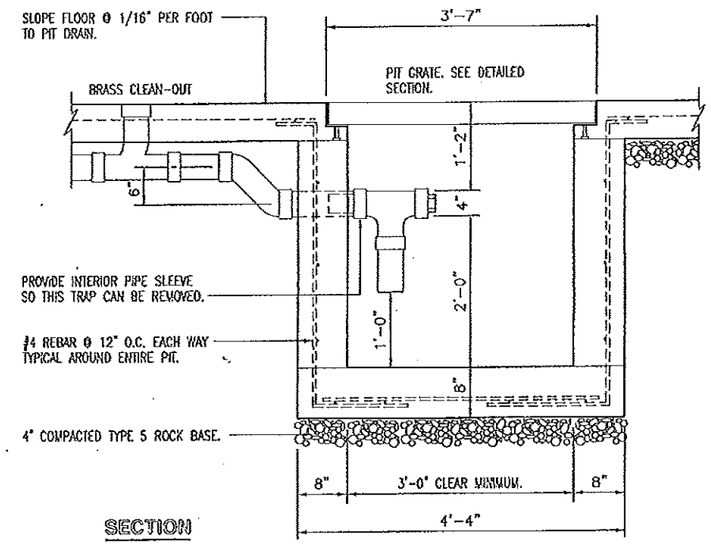

SECTION

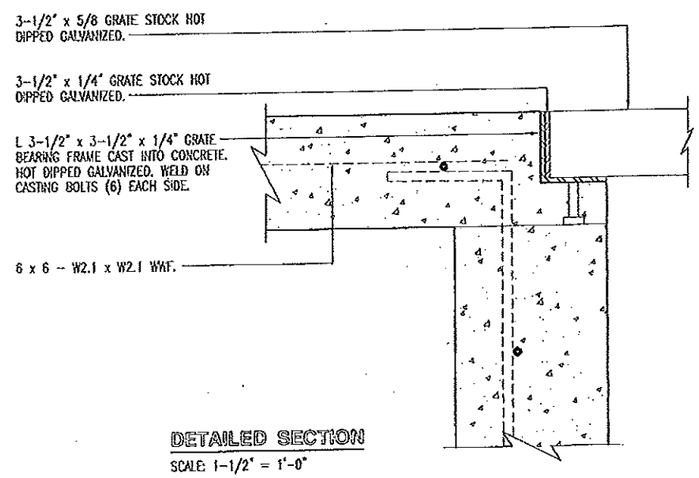

DETAILED SECTION
SCALE: 1-1/2" = 1'-0"

A / 6 PIT DRAIN
SCALE: ½" = 1' - 0"

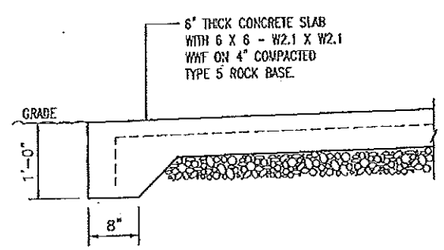

C / 6 SLAB SECTION
SCALE: ½" = 1' - 0"

Concrete Block Truck Wash
Central District
Boonville, Missouri

MISSOURI DEPARTMENT OF TRANSPORTATION
DIVISION OF GENERAL SERVICES
FACILITIES MANAGEMENT

FOUNDATION DETAILS

Sheet 6 of 15

STATE OF MISSOURI
DOUGLAS A. RECORD
NUMBER A-2009002624
ARCHITECT

6/4/12

ENGINEERING DESIGN AND SHOP DRAWINGS:

1. PROFESSIONAL ENGINEER: ALL TRUSS DESIGNS SHALL BEAR THE NAME, SEAL, AND REGISTRATION NUMBER OF A LICENSED PROFESSIONAL ENGINEER.
2. TRUSS DESIGNS SHALL CONTAIN THE FOLLOWING DATA:
   - A. LOADING (UNIFORM)
     - 1. TOP CHORD
       - LIVE LOAD 20 PSF
       - DEAD LOAD 10 PSF
       - SNOW DRIFT – PER 2003 IBC
     - 2. BOTTOM CHORD
       - DEAD LOAD 5 PSF
       - TOTAL LOAD 35 PSF
   - B. METAL CONNECTORS – NOTE GAUGE SIZES OF CONNECTORS, NAME OF MANUFACTURER, AND CAPACITY OF EACH CONNECTION.
   - C. LUMBER SPECIFICATIONS
   - D. PITCH, SPAN, AND SPACING OF TRUSSES
   - E. DESIGN LOADINGS AND ALLOWABLE UNIT STRESS INCREASE, IF ANY
   - F. FORCE ANALYSIS OF BAR FORCES IN EACH MEMBER
   - G. SIZE AND LOCATION OF ALL CONNECTOR PLATES
   - H. TRUSS SUPPORTS
   - I. CAMBER, IF ANY
   - J. PERMANENT BRACING
   - K. HANDLING AND ERECTION INSTRUCTIONS
   - L. SPECIFY TRUSS TIES FOR SECURE APPLICATION TO SUBSTRATE DUE TO UPLIFT.
3. FIVE COPIES OF EACH TRUSS DESIGN AND/OR SHOP DRAWINGS SHALL BE SUBMITTED TO THE ARCHITECT FOR REVIEW PRIOR TO THE FABRICATION OF ANY COMPONENTS.
4. STRUCTURAL ENGINEERS REVIEW OF DRAWINGS PREPARED BY THE CONTRACTORS, SUPPLIERS, ETC., ARE ONLY FOR CONFORMANCE WITH DESIGN CONCEPT. CONSTRUCTION SHALL NOT START WITHOUT SAID REVIEW.

DESIGN CRITERIA:
1. BUILDING CODE: CURRENT IBC
2. SEISMIC AV = 0.125; AA = 0.13
3. BASIC WIND SPEED 90 MPH, EXPOSURE C
4. PITCH 4:12

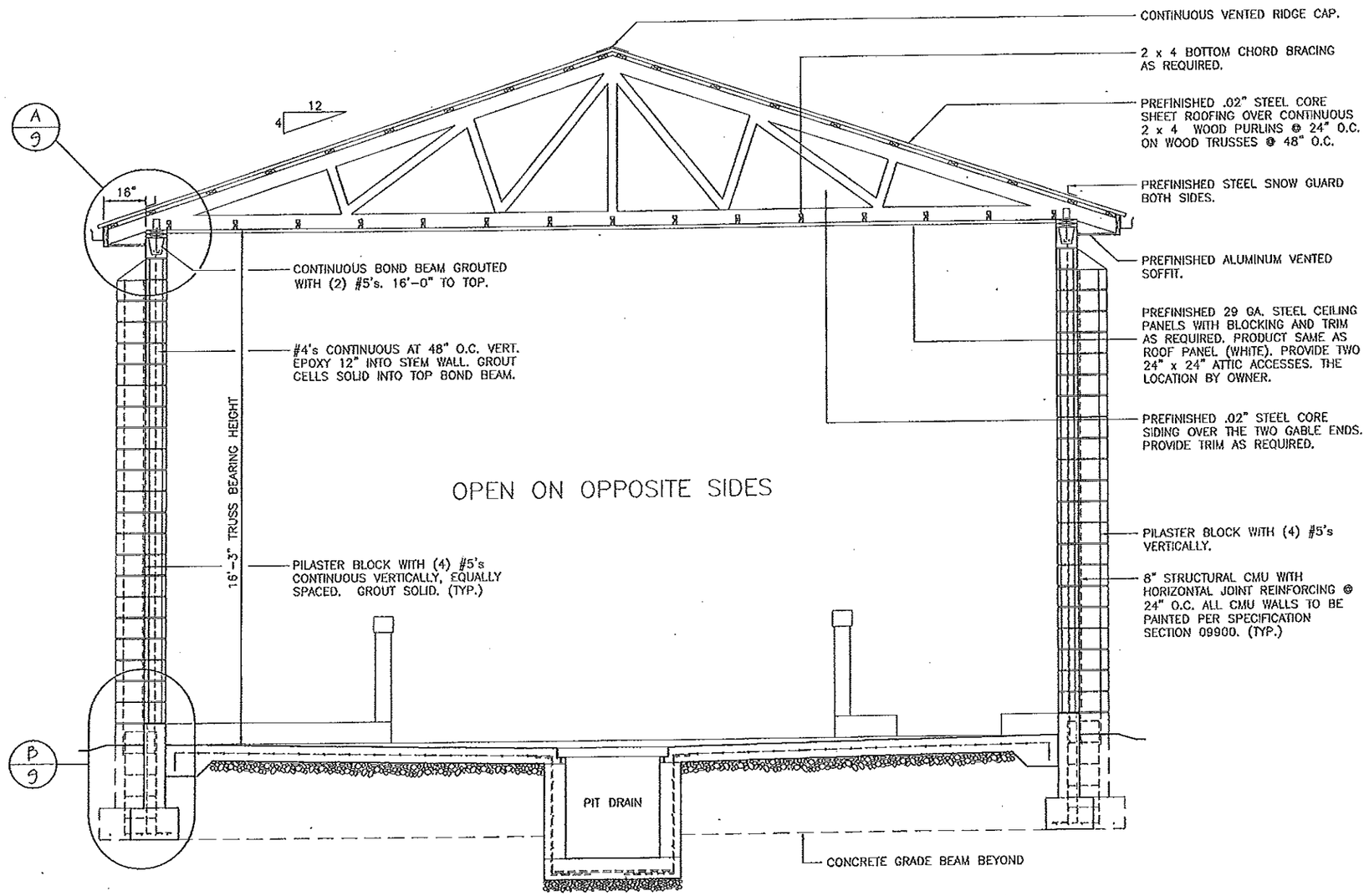

BASE BID
A/7 BUILDING SECTION
SCALE: 1/4" = 1' - 0"

Concrete Block Truck Wash
Central District
Boonville, Missouri

MISSOURI DEPARTMENT OF TRANSPORTATION
DIVISION OF GENERAL SERVICES
FACILITIES MANAGEMENT

Building Section - Base Bid

Sheet 7 of 15

STATE OF MISSOURI
DOUGLAS A. RECORD
NUMBER A-2009002624
ARCHITECT

6/4/12

ENGINEERING DESIGN AND SHOP DRAWINGS:

1. PROFESSIONAL ENGINEER: ALL TRUSS DESIGNS SHALL BEAR THE NAME, SEAL, AND REGISTRATION NUMBER OF A LICENSED PROFESSIONAL ENGINEER.
2. TRUSS DESIGNS SHALL CONTAIN THE FOLLOWING DATA:
   - A. LOADING (UNIFORM)
     - 1. TOP CHORD
       - LIVE LOAD 20 PSF
       - DEAD LOAD 10 PSF
       - SNOW DRIFT -- PER 2003 IBC
     - 2. BOTTOM CHORD
       - DEAD LOAD 5 PSF
       - TOTAL LOAD 35 PSF
   - B. METAL CONNECTORS -- NOTE GAUGE SIZES OF CONNECTORS, NAME OF MANUFACTURER, AND CAPACITY OF EACH CONNECTION.
   - C. LUMBER SPECIFICATIONS
   - D. PITCH, SPAN, AND SPACING OF TRUSSES
   - E. DESIGN LOADINGS AND ALLOWABLE UNIT STRESS INCREASE, IF ANY
   - F. FORCE ANALYSIS OF BAR FORCES IN EACH MEMBER
   - G. SIZE AND LOCATION OF ALL CONNECTOR PLATES
   - H. TRUSS SUPPORTS
   - I. CAMBER, IF ANY
   - J. PERMANENT BRACING
   - K. HANDLING AND ERECTION INSTRUCTIONS
   - L. SPECIFY TRUSS TIES FOR SECURE APPLICATION TO SUBSTRATE DUE TO UPLIFT.
3. FIVE COPIES OF EACH TRUSS DESIGN AND/OR SHOP DRAWINGS SHALL BE SUBMITTED TO THE ARCHITECT FOR REVIEW PRIOR TO THE FABRICATION OF ANY COMPONENTS.
4. STRUCTURAL ENGINEERS REVIEW OF DRAWINGS PREPARED BY THE CONTRACTORS, SUPPLIERS, ETC., ARE ONLY FOR CONFORMANCE WITH DESIGN CONCEPT. CONSTRUCTION SHALL NOT START WITHOUT SAID REVIEW.

DESIGN CRITERIA:
1. BUILDING CODE: CURRENT IBC
2. SEISMIC AV = 0.125; AA = 0.13
3. BASIC WIND SPEED 90 MPH, EXPOSURE C
4. PITCH 4:12

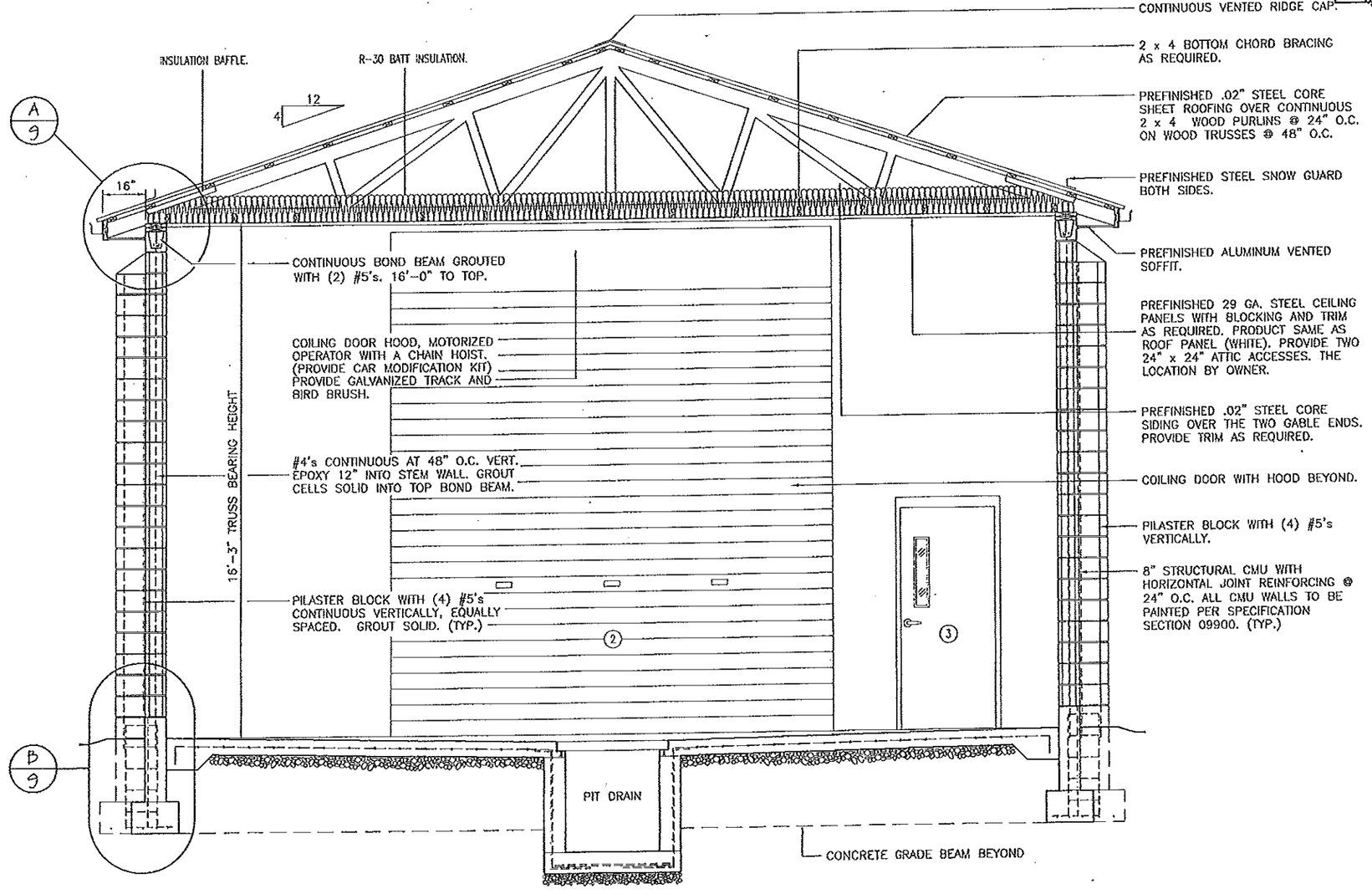

A/8 ALTERNATE #1
BUILDING SECTION
SCALE: 1/4" = 1' - 0"

Concrete Block Truck Wash
Central District
Boonville, Missouri

MISSOURI DEPARTMENT OF TRANSPORTATION
DIVISION OF GENERAL SERVICES
FACILITIES MANAGEMENT

Building Section - Alternate #1

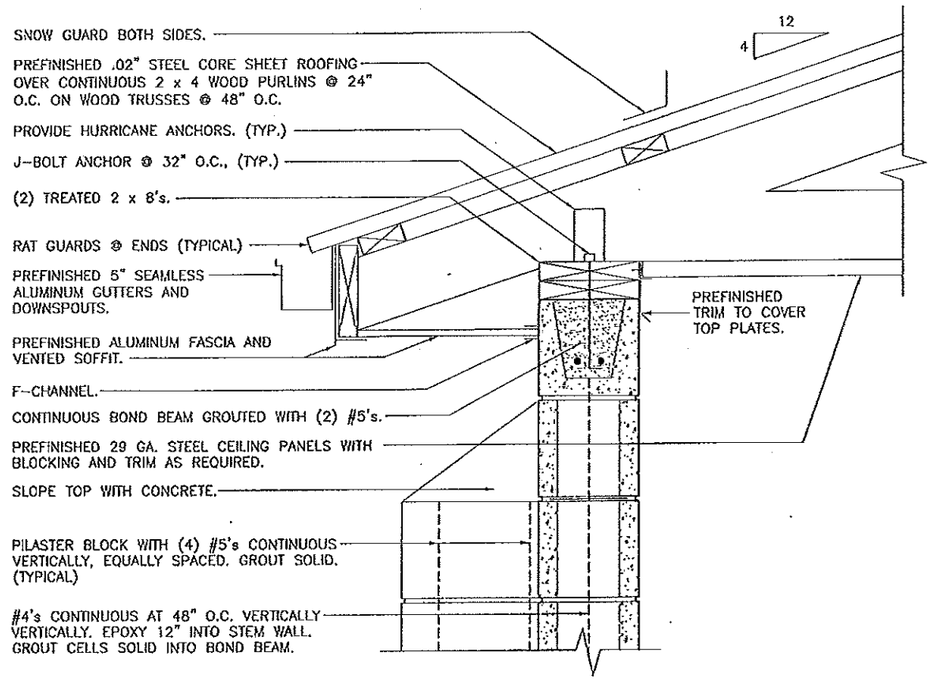

A/9 WALL SECTION
SCALE: 1" = 1' - 0"

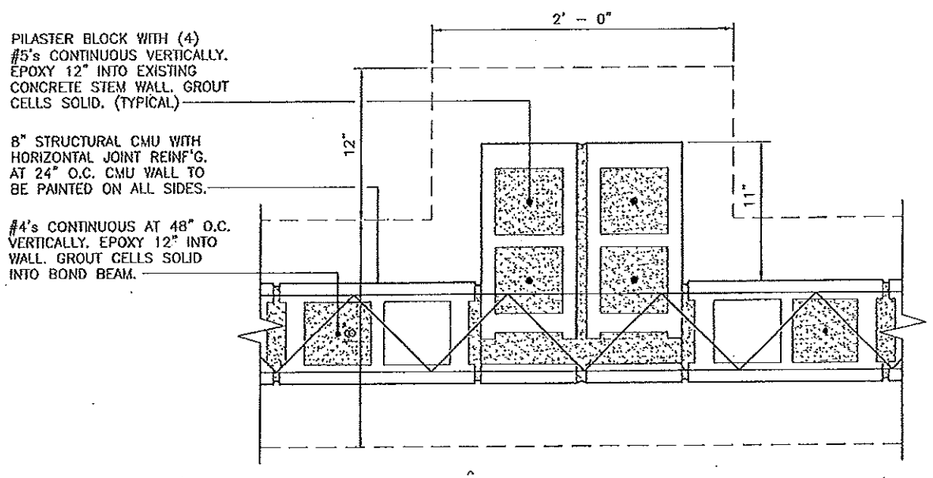

C/9 PILASTER DETAIL
SCALE: 1" = 1' - 0"

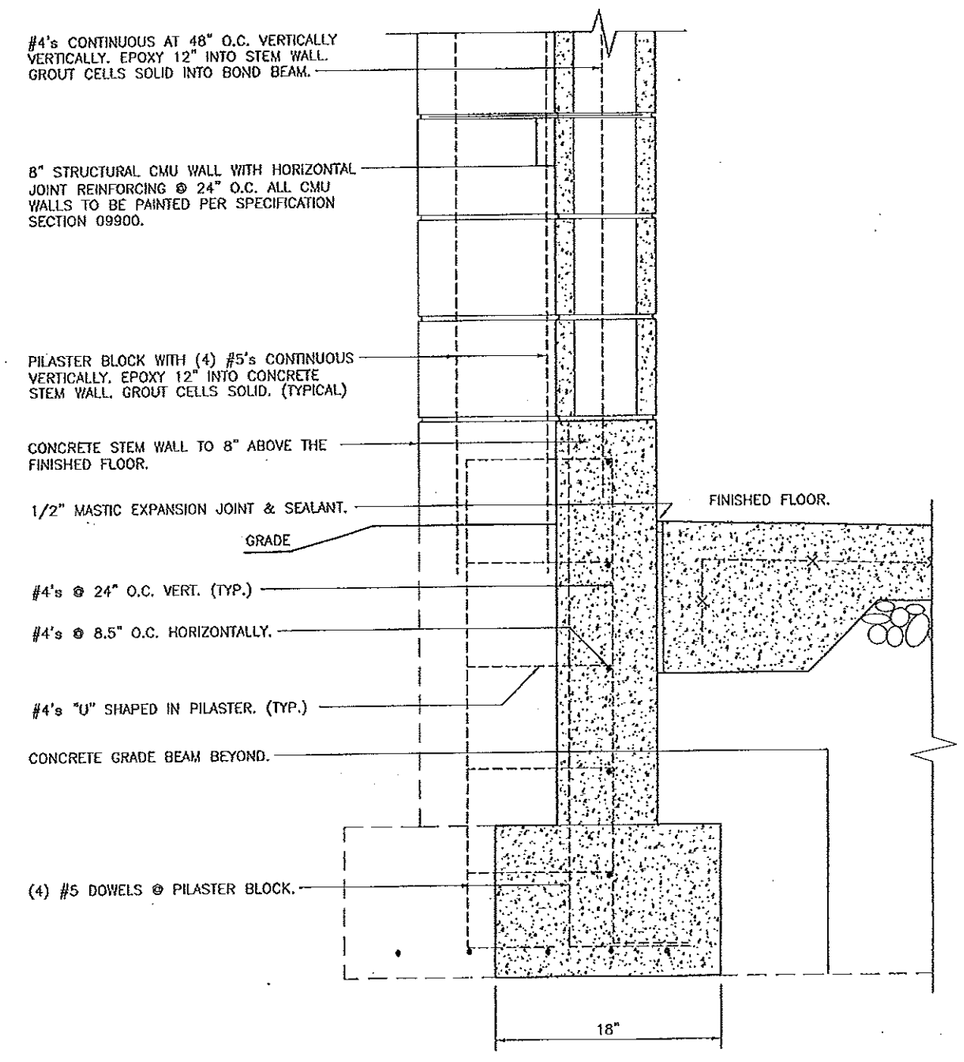

B/9 WALL SECTION
SCALE: 1" = 1' - 0"

STATE OF MISSOURI
DOUGLAS A. RECORD
NUMBER A-2009002624
ARCHITECT

6/4/12

DATE: 10-14-11

Concrete Block Truck Wash
Central District
Boonville, Missouri

MISSOURI DEPARTMENT OF TRANSPORTATION
DIVISION OF GENERAL SERVICES
FACILITIES MANAGEMENT

DETAILS

Sheet 9 of 15

STATE OF MISSOURI
DOUGLAS A. RECORD
NUMBER A-2009002624
ARCHITECT

Douglas A. Record
6/4/12

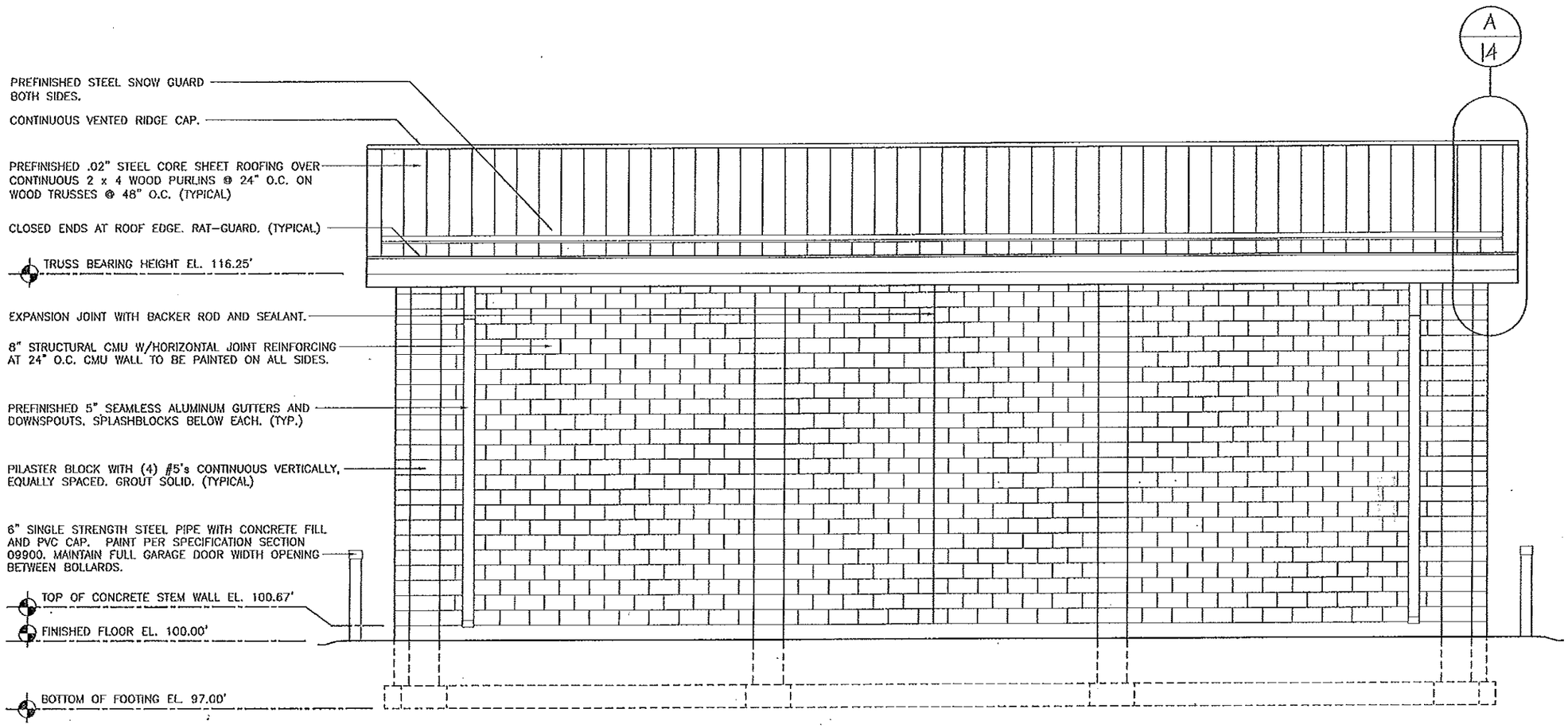

BASE BID

A/10 WEST ELEVATION

SCALE: 3/16" = 1' - 0"

EAST SIDE TYPICAL.

Concrete Block Truck Wash
Central District
Boonville, Missouri

MISSOURI DEPARTMENT OF TRANSPORTATION
DIVISION OF GENERAL SERVICES
FACILITIES MANAGEMENT

West Elevation - Base Bid

Sheet 10 of 15

STATE OF MISSOURI
DOUGLAS A. RECORD
NUMBER A-2009002624
ARCHITECT

Douglas A. Record
6/4/12

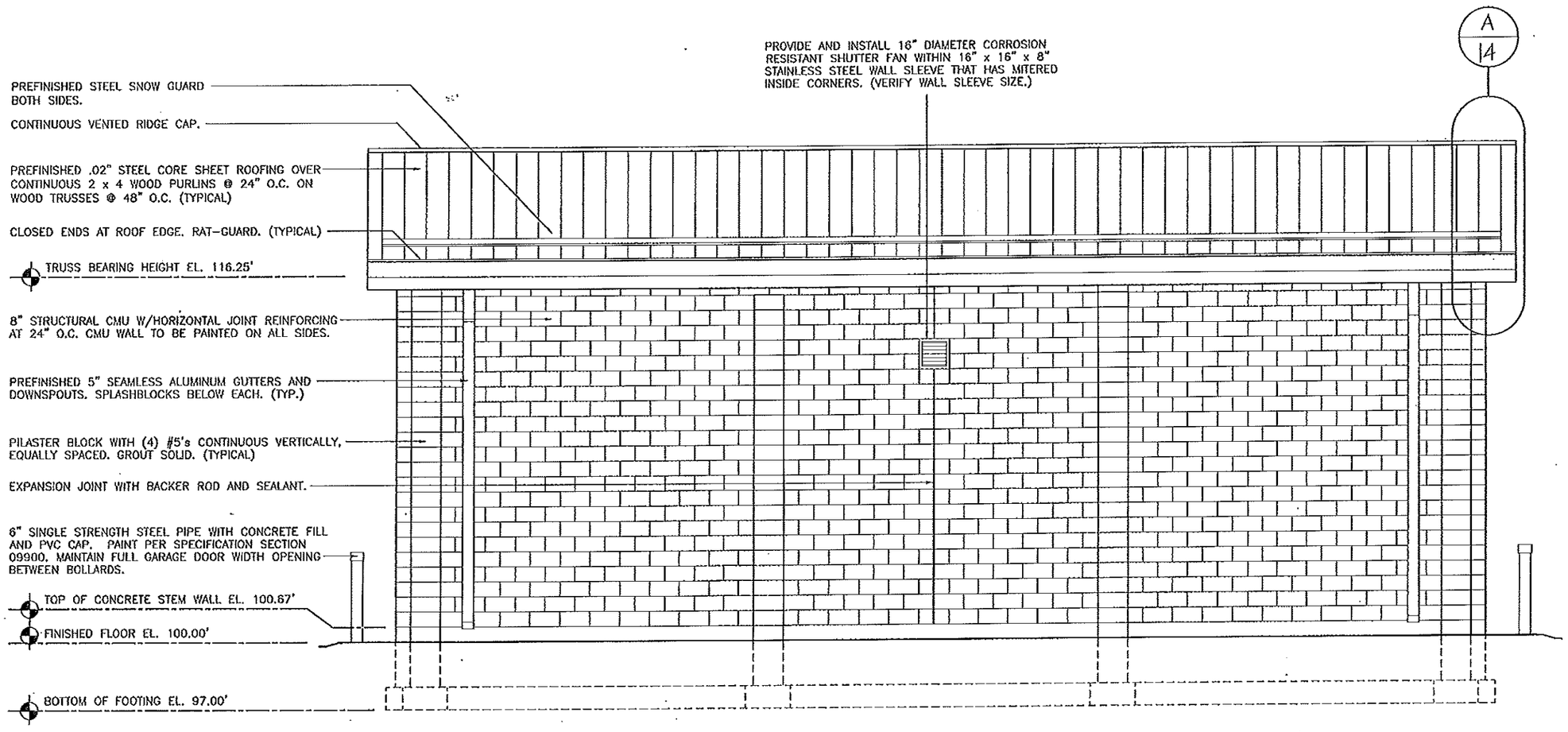

A/11 ALTERNATE #1
WEST ELEVATION
SCALE: 3/16" = 1' - 0"

EAST SIDE TYPICAL BUT WITHOUT EXHAUST FAN.

Concrete Block Truck Wash
Central District
Boonville, Missouri

MISSOURI DEPARTMENT OF TRANSPORTATION
DIVISION OF GENERAL SERVICES
FACILITIES MANAGEMENT

West Elevation - Alternate #1

Sheet 11 of 15

STATE OF MISSOURI
DOUGLAS A. RECORD
NUMBER A-2009002624
ARCHITECT

6/4/12

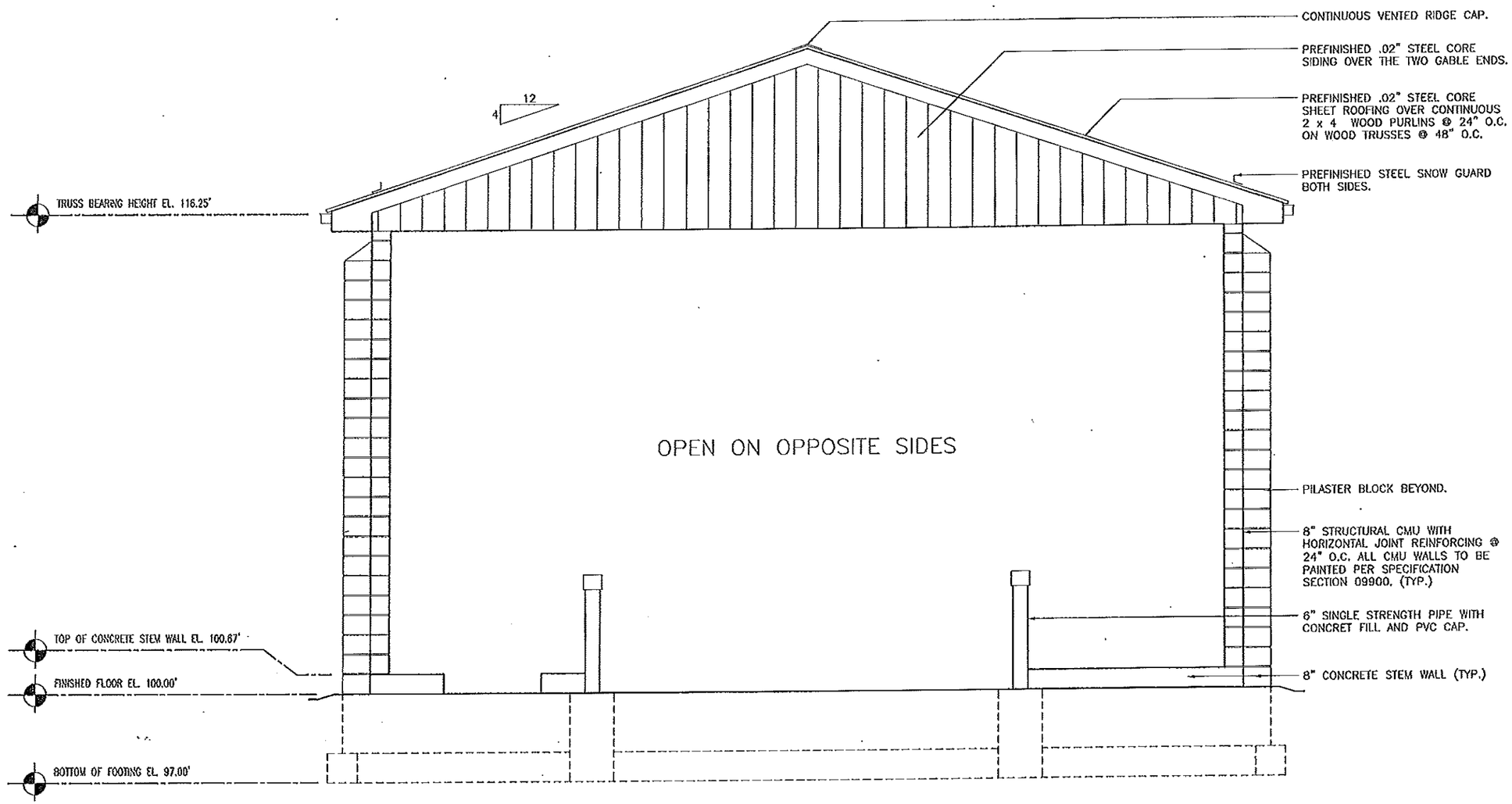

A/12 BASE BID SOUTH ELEVATION
SCALE: 1/4" = 1' - 0"

DATE: 10-14-11

Concrete Block Truck Wash
Central District
Boonville, Missouri

MISSOURI DEPARTMENT OF TRANSPORTATION
DIVISION OF GENERAL SERVICES
FACILITIES MANAGEMENT

South Elevation - Base Bid

Sheet 12 of 15

STATE OF MISSOURI
DOUGLAS A. RECORD
NUMBER A-2009002624
ARCHITECT

Douglas A. Record
6/4/12

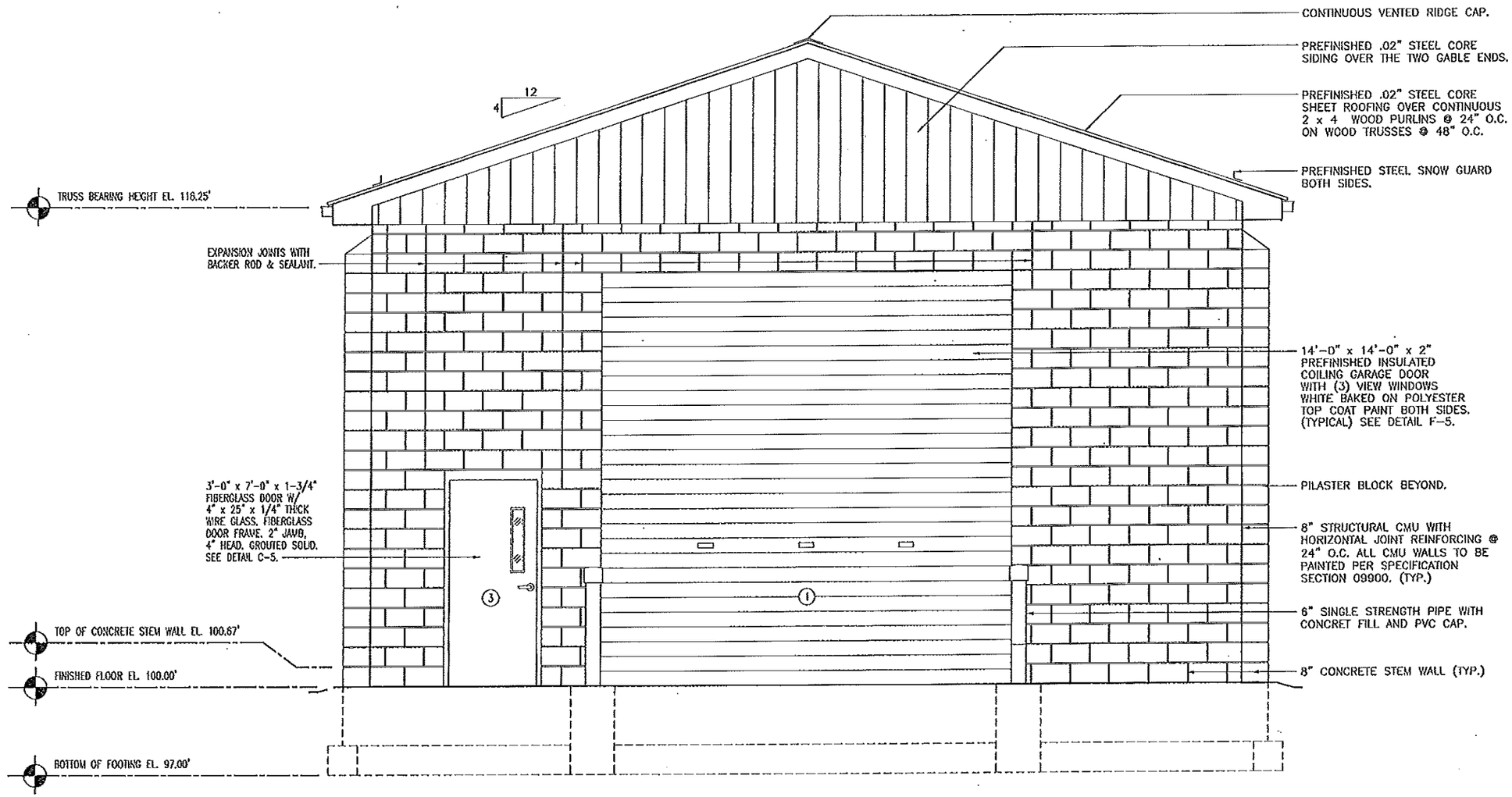

A/13 ALTERNATE #1
SOUTH ELEVATION
SCALE: 1/4" = 1' - 0"

NORTH ELEVATION SIMIRAL WITHOUT PASSAGE DOOR.

CHECKED BY: DOUG RECORD
DATE: 10-14-11

Concrete Block Truck Wash
Central District
Boonville, Missouri

MISSOURI DEPARTMENT OF TRANSPORTATION
DIVISION OF GENERAL SERVICES
FACILITIES MANAGEMENT

South Elevation - Alternate #1

Sheet 13 of 15

GENERAL NOTES:

1. CONCRETE WORK SHALL BE EXECUTED IN STRICT COMPLIANCE WITH THE LATEST EDITION OF THE AMERICAN CONCRETE INSTITUTE (A.C.I.) MANUAL OF CONCRETE PRACTICE.
2. FOUNDATION DESIGN IS BASED UPON AN ASSUMED SOIL BEARING CAPACITY OF 2,000 PSF. IF WET OR UNUSUAL SOIL CONDITIONS ARE ENCOUNTERED, NOTIFY THE DESIGNER AND CONSTRUCTION INSPECTOR BEFORE PROCEEDING WITH THE WORK.
3. IF CONDITIONS REQUIRING ROCK EXCAVATION ARE ENCOUNTERED, NOTIFY THE DESIGNER AND FIELD INSPECTOR BEFORE PROCEEDING WITH THE WORK.
4. ALL CONCRETE SHALL BE TYPE I CEMENT WITH A COMPRESSIVE STRENGTH OF 4,000 PSI @ 28 DAYS WITH 4" SLUMP.
5. CONCRETE EXPOSED TO THE EXTERIOR SHALL RECEIVE AIR ENTRAINMENT OF 6% ± 2%.
6. GRADE BEAMS AND FOOTINGS SHALL BEAR A MINIMUM OF 12" INTO UNDISTURBED SOIL AND 36" MINIMUM BELOW FINISH GRADE.
7. DEFORMED STEEL REINFORCING BARS SHALL BE #5 AND LARGER, ASTM A615 GRADE 60.
8. PROVIDE CORNER REINFORCING BARS WITH 12" MINIMUM LAP EQUAL IN SIZE AND GRADE TO CONNECTING BARS.
9. INTERIOR AND EXTERIOR CONCRETE FLATWORK SHALL HAVE A LIGHT BROOM FINISH.
10. COORDINATE WORK OF OTHER TRADES REQUIRED TO BE INSTALLED IN, UNDER, OR THROUGH CONCRETE PRIOR TO PLACEMENT OF CONCRETE. INSTALL ALL ANCHORAGES AND SLEEVES REQUIRED FOR THE INSTALLATION OF WORK BY OTHER TRADES.
11. SAWED CONTROL JOINTS SHALL BE CLEANED FREE OF ALL DEBRIS AND FILLED WITH DOW CORNING 888 SILICONE JOINT SEALANT OR AN APPROVED EQUAL. SAWCUT WITHIN 24 HOURS.
12. SEE SPECIFICATION SECTION 03300 CONCRETE FOR ADDITIONAL INFORMATION.

PLUMBING NOTES:

1. PLUMBING SHALL BE INSTALLED IN STRICT COMPLIANCE WITH THE LATEST EDITION OF THE IBC PLUMBING CODE.
2. PLUMBING SHALL BE LOCATED AND PLACED UNDER THE SLAB PRIOR TO POURING OF CONCRETE. PIPING SHALL BE RUN IN SAND FILLED TRENCH UNDER THE BASE ROCK AND SLEEVED WITH PVC WHENEVER RUN THROUGH CONCRETE.
3. PROVIDE PLUMBING EQUIPMENT AND ACCESSORIES REQUIRED FOR COMPLETE AND OPERATIONAL PLUMBING SYSTEMS AS REQUIRED BY MANUFACTURER'S INSTRUCTIONS AND DIRECTIONS FOR SYSTEMS SPECIFIED.
4. 3/4" YARD HYDRANT: EQUAL TO WOODFORD MODEL Y2 FREEZELESS, BACKFLOW PROTECTED, AUTOMATIC DRAINING YARD HYDRANT. PROVIDE 36" BURY LENGTH.
5. 2" YARD HYDRANT: EQUAL TO #71 NATIONAL TYPE "A" COMPRESSION HYDRANT. ANTI-FREEZING AUTOMATIC DRAIN. ALL BRONZE WITH 2" VALVE OPENING & 10" WHEEL TOP. 36" BURY LENGTH.

GRADING NOTES:

FILLING AND BACKFILLING: PLACE BACKFILL AND FILL MATERIALS IN LAYERS NOT MORE THAN 8" IN LOOSE DEPTH. BEFORE COMPACTION, MOISTEN OR AERATE EACH LAYER AS NECESSARY TO PROVIDE THE SPECIFIED MOISTURE CONTENT. COMPACT EACH LAYER TO REQUIRED PERCENTAGE OF MAXIMUM DENSITY FOR THE AREA.

WASTE EARTH MATERIAL: STORED ON SITE. LOCATION AS DIRECTED BY OWNER.

EXCAVATION: CONTRACTOR TO SLOPE GRADE AWAY FROM NEW TRUCK WAS AS REQUIRED WITH 6" TYPE 5 ROCK BASE INCLUDING ALL AREAS DISTURBED DURING CONSTRUCTION.

STAKING: STRUCTURE LOCATION STAKED BY MODOT AT MAINTENANCE SITE.

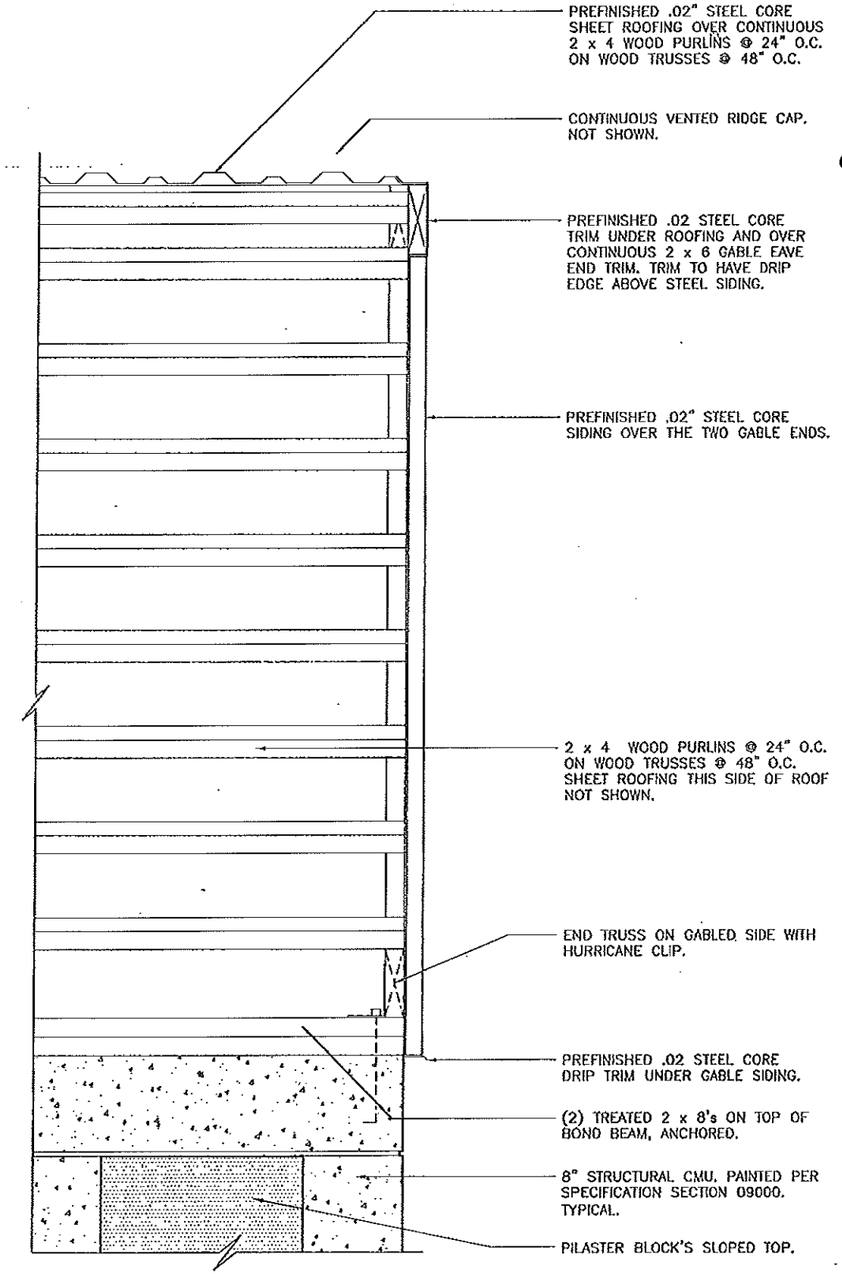

A/14 GABLE DETAIL
SCALE: 1" = 1' - 0"

STATE OF MISSOURI
DOUGLAS A. RECORD
NUMBER A-2009002624
ARCHITECT
6/4/12

DATE: 10-14-11

Concrete Block Truck Wash
Central District
Boonville, Missouri

MISSOURI DEPARTMENT OF TRANSPORTATION
DIVISION OF GENERAL SERVICES
FACILITIES MANAGEMENT

GENERAL NOTES

HVAC SCHEDULE

SYM.:	UNIT	MANUFACTURER	BTU OUTPUT	FUEL	VOLTAGE	REMARKS
A	GAS FIRED UNIT HEATER	REZNOR MODEL UDAS 60 OR EQUAL	49,800	PROPANE GAS	115	409 STAINLESS STEEL HEAT EXCHANGERS, TOTALLY ENCLOSED FAN MOTOR, HORIZONTAL COMBUSTION AIR/VENT KIT INCLUDING CONCENTRIC ADAPTER.
B	16" DIA. CORROSION RESISTANT SHUTTER FAN	DAYTON 1BLJ1 OSHA GUARD OR EQUAL	2,005 CFM	ELECTRIC	115	FIBERGLASS SHUTTER & BLADES. 2.1 AMPS.
T	THERMOSTAT TP-PAC	CARRIER – EDGE OR EQUAL	--	--	--	7 DAY PROGRAMMABLE.

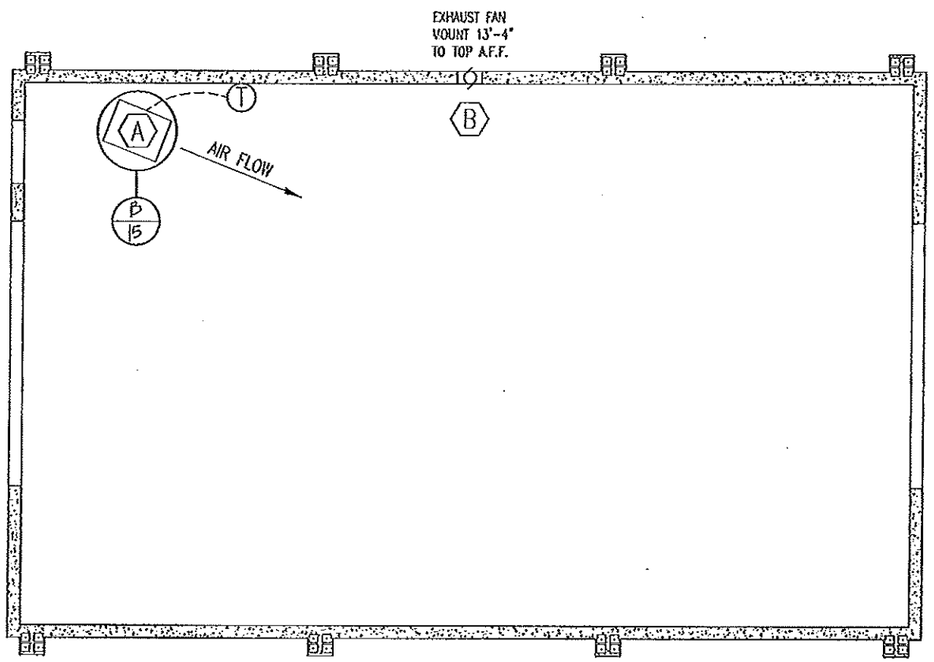

A/15 ALTERNATE #1
MECHANICAL PLAN
SCALE: 1/8" = 1' – 0"

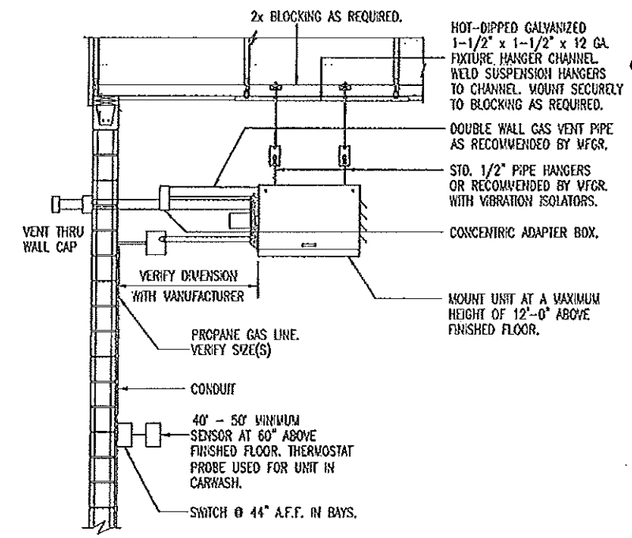

B/15 ALTERNATE #1
UNIT HEATER INSTALLATION
NOT TO SCALE

MECHANICAL NOTES

1. DRAWINGS AND DIAGRAMS ARE DIAGRAMMATIC AND SHALL NOT BE SCALED. REFER TO ARCHITECTURAL DRAWINGS FOR DIMENSIONS.
2. MECHANICAL WORK SHALL BE INSTALLED IN STRICT COMPLIANCE WITH THE LATEST EDITION OF THE IBC MECHANICAL CODE.
3. PROVIDE EQUIPMENT AND APPURTENANCES NOT NECESSARILY SHOWN OR SPECIFIED BUT NEEDED FOR COMPLETE AND PROPER INSTALLATION.
4. ALL EQUIPMENT AND MATERIALS, IN PARTICULAR VALVES, FILTERS, MOTORS, AND CONTROLS SHALL BE ARRANGED TO PROVIDE PROPER CLEARANCE FOR SERVICE, MAINTENANCE, AND INSPECTION.
5. MECHANICAL SUBCONTRACTOR SHALL FULLY COORDINATE ALL WORK WITH PLUMBING AND ELECTRICAL WORKERS PRIOR TO COMMENCING OF THE MECHANICAL INSTALLATION.
6. PROVIDE BLOCKING TO HVAC DEVICES AS REQUIRED FOR A SECURE APPLICATION.

STATE OF MISSOURI
DOUGLAS A. RECORD
NUMBER A-2009002624
ARCHITECT
6/4/12

Concrete Block Truck Wash
Central District
Boonville, Missouri

MISSOURI DEPARTMENT OF TRANSPORTATION
DIVISION OF GENERAL SERVICES
FACILITIES MANAGEMENT

Mechanical Plan - Alternate #1

Sheet 15 of 15

TECHNICAL SPECIFICATIONS
FOR

MODOT BOONVILLE MAINTENANCE FACILITY TRUCK WASH IMPROVEMENTS

ENGINEER: SHAFER, KLINE AND WARREN, INC.
3200 Penn Terrace, Suite 100
Columbia, MO 65202
573-442-4537

END OF DOCUMENT 00001

DOCUMENT 00005
CERTIFICATIONS PAGE

STATE OF MISSOURI STEVEN R. SCHULTZ NUMBER E-2001004664 5-10-12 REGISTERED PROFESSIONAL ENGINEER	I hereby certify that this engineering document was prepared by me or under my direct personal supervision and that I am a duly licensed Professional Engineer under the laws of the State of Missouri. Signature: _____ Date: 5-10-12 Name: Steven R. Schultz Missouri License No.: 2001004664 My license renewal date is December 31, 2012. Pages, Sheets, or Divisions covered by this seal: All

END OF DOCUMENT 00005

TABLE OF CONTENTS

00001 PROJECT MANUAL TITLE PAGE
00005 CERTIFICATIONS PAGE
00010 TABLE OF CONTENTS
00015 LIST OF DRAWINGS

TECHNICAL SPECIFICATIONS

DIVISION 01 – GENERAL REQUIREMENTS

01012 SUMMARY OF WORK
01300 SUBMITTALS
01400 QUALITY CONTROL
01500 CONSTRUCTION FACILITIES AND TEMPORARY CONTROLS
01600 MATERIAL AND EQUIPMENT
01650 STARTING OF SYSTEMS
01700 CONTRACT CLOSEOUT

DIVISION 02 – SITE WORK

02100 SITE PREPARATION
02220 EXCAVATING, BACKFILLING AND COMPACTING (Building)
02320 EARTHWORK AND TRENCHING (Water / Sewer)
02530 PIPING SYSTEM PRODUCTS
02535 PIPING SYSTEMS INSTALLATION
02605 PRECAST MANHOLES AND VAULTS
02725 WATER LINE TESTING AND FLUSHING
02726 WATER LINE DISINFECTION
02922 SEEDING

DIVISION 03 - CONCRETE

03100 CONCRETE FORMWORK
03200 CONCRETE REINFORCEMENT
03300 CAST-IN-PLACE CONCRETE
03346 CONCRETE FLOOR FINISHING
03370 CONCRETE CURING

DIVISION 04 – MASONRY

04100 MORTAR AND MASONRY GROUT
04300 UNIT MASONRY SYSTEM

DIVISION 05 – METALS

05500 METAL FABRICATIONS
05531 GRATINGS AND FLOOR PLATES

TABLE OF CONTENTS

DIVISION 06 – WOOD AND PLASTIC

06112 FRAMING AND SHEATHING

DIVISION 07 – THERMAL AND MOISTURE PROTECTION

07210 BUILDING INSULATION
07465 ALUMINIUM SOFFIT PANELS
07600 FLASHING AND SHEET METAL
07612 SHEET METAL ROOFING
07631 GUTTERS AND DOWNSPOUTS
07900 JOINT SEALERS

DIVISION 08 - DOORS AND WINDOWS

08300 FIBERGLASS REINFORCED PLASTIC DOORS AND FRAMES
08351 OVERHEAD COILING DOORS
08710 DOOR HARDWARE
08720 ELECTRIC DOOR OPERATORS

DIVISION 09 - FINISHES

09900 PAINTING

DIVISION 13 – SPECIAL CONSTRUCTION

13235 LAGOON CLEANING

DIVISION 15 - MECHANICAL

15050 MATERIALS AND METHODS
15100 PROCESS AND MISC. VALVES
15500 HEATING, VENTILATING AND AIR CONDITIONING

END OF DOCUMENT

DOCUMENT 00015
LIST OF DRAWINGS

Drawings are not bound in this book.

Sheet	Drawings	Date
C001	Cover Sheet	04/25/12
C100	Demolition Plan	04/25/12
C200	Sanitary Sewer Plan & Profile	04/25/12
C201	Sanitary Sewer Plan & Profile	04/25/12
C202	Utility & Grading Plan	04/25/12
C500	Construction Details	04/25/12
C501	Construction Details	04/25/12
1-15	Concrete Block Truck Wash Plans	10/15/10

END OF DOCUMENT 00015

SECTION 01012

SUMMARY OF WORK

PART 1 GENERAL

1.1 SECTION INCLUDES

A. Contract Description.

B. Contractor use of site and work area.

C. Existing Utilities and Improvements.

D. Protection of existing property and existing improvements.

1.2 CONTRACT DESCRIPTION

A. Contract Type: Unit Price.

B. Work under this contract will include the construction of a new truck wash building, potable water service, sanitary sewer service, abandonment of existing well, demolition of existing structures and facilities, and related appurtenances to serve the MODOT Boonville Maintenance Facility. Work shall include all materials and labor associated with the contract as specified and indicated on the Drawings.

1.3 CONTRACTOR USE OF SITE AND WORK AREA

A. Limit use of site and work area to maintain traffic on streets and allow property owners access to their property.

B. Owner has obtained or is in the process of obtaining permanent and temporary easements as is necessary to construct the project. Contractor shall confine construction activities to the apparent public rights-of-way and easements provided. Should Contractor desire temporary easements for construction, access in addition to that obtained by Owner, he shall obtain them at no additional cost to Owner.

C. Contractor is responsible to make repairs to any property damaged during construction. All materials and workmanship used shall be of equal or better quality to the materials and workmanship used in the original construction of the surface and shall be subject to the approval of the Engineer.

1.4 EXISTING UTILITIES

A. The size, type and location of all known obstacles in the right-of-way of the proposed construction are shown on the Drawings. Owner does not guarantee the number, type, size or location of the obstacles and they are given only as a guide to the Contractor in their location ahead of excavation. No additional compensation will be allowed for delays or costs caused by existing obstacles being incorrectly located or inadvertently omitted from the Drawings.

1.5 CONTRACTOR USE OF SITE AND PREMISES

A. Limit use of site and premises to allow:
   1. Owner occupancy, operations, and maintenance.
   2. Work by Owner.

B. Construction Operations:

1. Limited to areas within general limits shown on the Drawings, inside Owners properties and , easements, except where specifically noted on the Drawings.
2. Contractor may use the areas noted on the Drawings for storage and staging.

C. Time Restrictions: No work shall be done on Saturday, Sunday, legal holidays, or at night, without the approval of Owner in each case, except such work as may be necessary for the proper care, maintenance and protection of work already done or of equipment and public property covered by the Contract., or to meet demanding time limitations on specific work activities called for under this contract. Approval of Owner shall be sought at least forty-eight (48) hours in advance of such work whenever practicable.

1. Before Contractor requests work to take place on Saturday, Sundays, or legal holidays on repeated basis to expedite the Work or make up for lost progress, Contractor shall first schedule and work five 10-hour weekdays for at least three weeks prior.

D. Unfavorable Construction Conditions: During unfavorable weather, wet ground, or other unsuitable construction conditions, Contractor shall confine his operations to Work which will not be affected adversely by such conditions. No portion of the Work shall be constructed under conditions which would affect adversely the quality or efficiency thereof, unless special means or precautions are taken by Contractor to perform the Work in a proper and satisfactory manner.

E. Utility Outages and Shutdown: Brief shutdown of utilities, other than described herein, will be acceptable to Owner provided that the duration does not exceed one-half hour, and at least 48 hours prior notice has been given by Contractor.

1.6 WORK SEQUENCE

A. The construction sequence specified herein has been developed to serve as a basis to Contractor for development of a complete and comprehensive construction schedule in accordance with Section 01300 - Submittals. The Contractor shall expand the construction schedule from the sequence of construction presented herein. Contractor shall address in his construction schedule, the sequence of construction to be followed for each of the elements of Work identified herein and any other construction activities required for completion of the Work required by the Contract Documents. Alternatives to the sequence of construction below will be considered only if they offer advantages of fewer disruptions to treatment facility operation or the collection system, fewer or shorter duration shutdowns for facility tie-ins, or reduced risk of discharge permit violations. The suggested sequence of construction shall not relieve Contractor from any Work required by the Contract Documents nor from meeting the Contract Times specified in the Agreement.

B. Sequence of Construction

1. Construct water and sewer mains
2. Construct new truck wash building (can occur concurrently with main construction).
3. Perform testing for sewers and watermain.
4. Place mains in service.
5. Demo existing wellhouse and septic tank.
6. Abandon existing well.
7. Complete construction and restoration.

1.7 LINES AND GRADES

A. All Work shall be done to the lines, grades, and elevations indicated on the Drawings.

B. All construction staking is the responsibility of the Contractor.

1.8 CONNECTIONS TO EXISTING FACILITIES

A. Unless otherwise specified or indicated, Contractor shall make all necessary connections to existing facilities, including structures, drain lines, and utilities such as water, sewer, telephone, and electric. In each case, Contractor shall receive permission from Owner or the owing utility prior to undertaking connections. Contractor shall protect facilities against deleterious substances and damage.

B. Connections to existing facilities which are in service shall be thoroughly planned in advance, and all required equipment, materials, and labor shall be on hand at the time of undertaking the connections. Work shall proceed continuously (around the clock) if necessary to complete connections in the minimum time. Overtime work shall be scheduled with and approved by Owner in advance, as required within.

C. Operation of valves or other appurtenances on existing utilities, when required, shall be by or under the direct supervision of the owning utility.

PART 2 PRODUCTS

Not Used.

PART 3 EXECUTION

Not Used

END OF SECTION

SECTION 01300

SUBMITTALS

PART 1 GENERAL

1.1 SECTION INCLUDES

A. Submittal procedures.
B. Construction progress schedules.
C. Proposed Products list.
D. Product Data.
E. Shop Drawings.
F. Samples.
G. Design data.
H. Test reports.
I. Certificates.
J. Manufacturer's instructions.
K. Manufacturer's field reports.
L. Erection drawings.
M. Photographic Record

1.2 RELATED SECTIONS

A. Section 01300 - Submittals
B. Section 01400 - Quality Control: Manufacturers' field services and reports.
C. Section 01700 - Contract Closeout: Contract warranties, bonds, manufacturers' certificates and closeout submittals.

1.3 REFERENCES

A. AGC Associated General Contractors of America publication "The Use of CPM in Construction - A Manual for General Contractors and the Construction Industry".

1.4 SUBMITTAL PROCEDURES

A. Transmit each submittal with Architect/Engineer accepted form.

B. Identify Project, Contractor, Subcontractor or supplier; pertinent drawing and detail number and specification section number, as appropriate.

C. Apply Contractor's stamp, signed or initialed certifying that review, approval, verification of Products required, field dimensions, adjacent construction Work and coordination of information is in accordance with the requirements of the Work and Contract Documents.

D. Schedule submittals to expedite the Project, and deliver to Architect/Engineer at business address. Coordinate submission of related items.

E. For each submittal for review, allow 15 days excluding delivery time to and from the contractor.

F. Identify variations from Contract Documents and Product or system limitations, which may be detrimental to successful performance of the completed Work.

G. Submittals not requested will not be recognized or processed.

1.5 CONSTRUCTION PROGRESS SCHEDULES

A. Submit initial schedule in duplicate within 15 days after date established in Notice to Proceed.
B. Revise and resubmit as required.
C. Submit revised schedules with each Application for Payment, identifying changes since previous version.
D. Submit a horizontal bar chart with separate line for each major portion of Work or operation, identifying first workday of each week.

1.6 PROPOSED PRODUCTS LIST

A. Within 15 days after date of Notice to Proceed, submit list of major products proposed for use, with name of manufacturer, trade name and model number of each product.
B. For products specified only by reference standards, give manufacturer, trade name, model or catalog designation and reference standards.

1.7 PRODUCT DATA

A. Product Data For Review:
   1. Submitted to Architect/Engineer for review for the limited purpose of checking for conformance with information given and the design concept expressed in the contract documents.
   2. After review, provide copies and distribute in accordance with SUBMITTAL PROCEDURES article above and for record documents purposes described in Section 01700 - CONTRACT CLOSEOUT.

B. Product Data For Information:
   1. Submitted for the Architect/Engineer's knowledge as contract administrator or for the Owner.

C. Product Data For Project Close-out:
   1. Submitted for the Owner's benefit during and after project completion.

D. Submit the number of copies, which the Contractor requires, plus two copies that will be retained by the Architect/Engineer.

E. Mark each copy to identify applicable products, models, options and other data. Supplement manufacturers' standard data to provide information specific to this Project.

F. After review distribute in accordance with the Submittal Procedures article above and provide copies for record documents described in Section 01700 - CONTRACT CLOSEOUT.

1.8 SHOP DRAWINGS

A. Shop Drawings For Review:
   1. Submitted to Architect/Engineer for review for the limited purpose of checking for conformance with information given and the design concept expressed in the contract documents.
   2. After review, produce copies and distribute in accordance with SUBMITTAL PROCEDURES article above and for record documents purposes described in Section 01700 - CONTRACT CLOSEOUT.
B. Shop Drawings For Information:
   1. Submitted for the Architect/Engineer's knowledge as contract administrator or for the Owner.

C. Shop Drawings For Project Close-out:
   1. Submitted for the Owner's benefit during and after project completion.
D. Indicate special utility and electrical characteristics, utility connection requirements and location of utility outlets for service for functional equipment and appliances.
E. Submit in the form of one reproducible transparency and one opaque reproduction.

1.9 SAMPLES

A. Samples For Review:
   1. Submitted to Architect/Engineer for review for the limited purpose of checking for conformance with information given and the design concept expressed in the contract documents.
   2. After review, produce duplicates and distribute in accordance with SUBMITTAL PROCEDURES article above and for record documents purposes described in Section 01700 - CONTRACT CLOSEOUT.
B. Samples For Information:
   1. Submitted for the Architect/Engineer's knowledge as contract administrator or for the Owner.
C. Samples For Selection:
   1. Submitted to Architect/Engineer for aesthetic, color, or finish selection.
   2. Submit samples of finishes for Architect/Engineer selection.
   3. After review, produce duplicates and distribute in accordance with SUBMITTAL PROCEDURES article above and for record documents purposes described in Section 01700 - CONTRACT CLOSEOUT.

1.10 DESIGN DATA

A. Submit for the Architect/Engineer's knowledge as contract administrator or for the Owner.
B. Submit for information for the limited purpose of assessing conformance with information given and the design concept expressed in the contract documents.

1.11 TEST REPORTS

A. Submit for the Architect/Engineer's knowledge as contract administrator or for the Owner.
B. Submit test reports for information for the limited purpose of assessing conformance with information given and the design concept expressed in the contract documents.

1.12 CERTIFICATES

A. When specified in individual specification sections, submit certification by the manufacturer, installation/application subcontractor, or the Contractor to Architect/Engineer, in quantities specified for Product Data.
B. Indicate material or Product conforms to or exceeds specified requirements. Submit supporting reference data, affidavits and certifications as appropriate.
C. Certificates may be recent or previous test results on material or Product but must be acceptable to Architect/Engineer.

1.13 MANUFACTURER'S INSTRUCTIONS

A. When specified in individual specification sections, submit printed instructions for delivery, storage, assembly, installation, start-up, adjusting and finishing, to Architect/Engineer for delivery to owner in quantities specified for Product Data.
B. Indicate special procedures, perimeter conditions requiring special attention and special environmental criteria required for application or installation.

C. Refer to Section 01400 - Quality Control, Manufacturers' Field Services article.

1.14 MANUFACTURER'S FIELD REPORTS

A. Submit reports for the Architect/Engineer's benefit as contract administrator or for the Owner.
B. Submit for information for the limited purpose of assessing conformance with information given and the design concept expressed in the contract documents.

1.15 ERECTION DRAWINGS

A. Submit drawings for the Architect/Engineer's benefit as contract administrator or for the Owner.
B. Submit for information for the limited purpose of assessing conformance with information given and the design concept expressed in the contract documents.
C. Data indicating inappropriate or unacceptable Work may be subject to action by the Architect/Engineer or Owner.

1.16 PHOTOGRAPHIC RECORD

A. Prior to commencement of construction, the Contractor shall make a photographic record of all sites. The photographs shall be of sufficient detail to reveal the character of existing surfaces, including the condition of such features as curbs, sidewalks, driveways and inlets which may be affected by construction operations. All photographs shall be marked for identification, showing location by site number and station number. All photographs shall be 4x6 color prints. One set of bound photographs shall be submitted to the Owner for approval prior to commencement of construction operations. Direct compensation will not be paid for this requirement which shall be subsidiary to other items of the contract.

END OF SECTION

SECTION 01400

QUALITY CONTROL

PART 1 GENERAL

1.1 SECTION INCLUDES

A. Quality assurance - control of installation.
B. Tolerances
C. References and standards.
D. Mock-up.
E. Inspecting and testing laboratory services.
F. Manufacturers' field services.

1.2 RELATED SECTIONS

A. Section 01300 - Submittals: Submission of manufacturers' instructions and certificates.
B. Section 01600 - Material and Equipment: Requirements for material and product quality.
C. Section 01650 - Starting of Systems.

1.3 QUALITY ASSURANCE - CONTROL OF INSTALLATION

A. Monitor quality control over suppliers, manufacturers, Products, services, site conditions and workmanship, to produce Work of specified quality.
B. Comply with manufacturers' instructions, including each step in sequence.
C. Should manufacturers' instructions conflict with Contract Documents, request clarification from Architect/Engineer before proceeding.
D. Comply with specified standards as minimum quality for the Work except where more stringent tolerances, codes or specified requirements indicate higher standards or more precise workmanship.
E. Perform Work by persons qualified to produce required and specified quality.
F. Verify that field measurements are as indicated on shop drawings or as instructed by the manufacturer.
G. Secure Products in place with positive anchorage devices designed and sized to withstand stresses, vibration, physical distortion, or disfigurement.

1.4 TOLERANCES

A. Monitor fabrication and installation tolerance control of Products to produce acceptable Work. Do not permit tolerances to accumulate.
B. Comply with manufacturers' tolerances. Should manufacturers' tolerances conflict with Contract Documents, request clarification from Architect/Engineer before proceeding.
C. Adjust Products to appropriate dimensions; position before securing Products in place.

1.5 REFERENCES AND STANDARDS

A. For products or workmanship specified by association, trade or other consensus standards, comply with requirements of the standard, except when more rigid requirements are specified or are required by applicable codes.
B. Conform to reference standard by date of issue current on date for receiving bids or date specified in the individual specification sections, except where a specific date is established by code.
C. Neither the contractual relationships, duties or responsibilities of the parties in Contract nor those of the Architect/Engineer shall be altered from the Contract Documents by mention or inference otherwise in any reference document.

1.6 TESTING SERVICES

A. Contractor to provide all testing services as called out in these specifications.
B. Testing and source quality control may occur on or off the project site. Perform off-site testing as required by the Architect/Engineer or the Owner.
C. Testing does not relieve Contractor to perform Work to contract requirements.
D. Re-testing required because of non-conformance to specified requirements shall be performed by the same MoDOT personnel on instructions by the Architect/Engineer.

1.7 INSPECTION SERVICES

A. Owner will employ MoDOT Personnel to perform inspection.
B. Inspecting may occur on or off the project site. Perform off-site inspecting as required by the Architect/Engineer or the Owner.
C. Inspecting does not relieve Contractor to perform Work to contract requirements.

1.8 MANUFACTURERS' FIELD SERVICES

A. When specified in individual specification sections, require material or Product suppliers or manufacturers to provide qualified staff personnel to observe site conditions, conditions of surfaces and installation, quality of workmanship, start-up of equipment, test, adjust and the balancing of equipment as applicable and to initiate instructions when necessary.
B. Report observations and site decisions or instructions given to applicators or installers that are supplemental or contrary to manufacturers' written instructions.
C. Refer to Section 01300 - SUBMITTALS, MANUFACTURERS' FIELD REPORTS article.

PART 2 EXECUTION

2.1 EXAMINATION

A. Verify that existing site conditions and substrate surfaces are acceptable for subsequent Work. Beginning new Work means acceptance of existing conditions.
B. Verify that existing substrate is capable of structural support or attachment of new Work being applied or attached.

2.2 PREPARATION

A. Clean substrate surfaces prior to applying next material or substance.
B. Seal cracks or openings of substrate prior to applying next material or substance.
C. Apply manufacturer required or recommended substrate primer, sealer or conditioner prior to applying any new material or substance in contact or bond.

END OF SECTION

SECTION 01500

CONSTRUCTION FACILITIES AND TEMPORARY CONTROLS

PART 1 GENERAL

1.1 SECTION INCLUDES

A. Temporary Utilities: Electricity, telephone service, facsimile service and sanitary facilities.
B. Temporary Controls: enclosures and fencing, protection of the Work and water control.
C. Construction Facilities: progress cleaning and temporary buildings.

1.2 TEMPORARY ELECTRICITY

A. Cost: By Contractor; pay for temporary power service furnished by MoDOT.

1.3 TELEPHONE SERVICE

A. Provide, maintain, and pay for telephone service to field office and Architect/Engineer/Designer's field office at time of project mobilization.

1.4 FACSIMILE SERVICE

A. NOT APPLICABLE.

1.5 TEMPORARY WATER SERVICE

A. Connect to existing water source as directed for construction operations at time of project mobilization.
B. Contractor will reimburse Owner for water used in construction as agreed upon at time of project mobilization.

1.6 TEMPORARY SANITARY FACILITIES

A. Provide and maintain required facilities and enclosures. Provide at time of project mobilization.

1.7 FENCING

A. Construction: Use plastic mesh safety fencing or better.
B. Provide 48" high fence around construction site; equip with vehicular and pedestrian gates with locks.

1.8 WATER CONTROL

A. Grade site to drain. Maintain excavations free of water. Provide, operate and maintain pumping equipment.
B. Protect site from puddling or running water. Provide water barriers as required to protect site from soil erosion.

1.9 EXTERIOR ENCLOSURES

A. NOT APPLICABLE

1.10 PROTECTION OF INSTALLED WORK

A. Protect installed Work and provide special protection where specified in individual specification sections.
B. Provide temporary and removable protection for installed Products. Control activity in immediate work area to prevent damage.
C. Provide protective coverings at walls, projections, jambs, sills and soffits of openings.
D. Protect finished floors, stairs, and other surfaces from traffic, dirt, wear, damage or movement of heavy objects, by protecting with durable sheet materials.
E. Prohibit traffic or storage upon waterproofed or roofed surfaces. If traffic or activity is necessary, obtain recommendations for protection from waterproofing or roofing material manufacturer.

F. Prohibit traffic from landscaped areas.

1.11 SECURITY

A. Provide security and facilities to protect Work and existing facilities and Owner's operations from unauthorized entry, vandalism or theft.
B. Coordinate with Owner's security program.

1.12 ACCESS ROADS

A. Provide and maintain access to fire hydrants, free of obstructions.
B. Provide means of removing mud from vehicle wheels before entering streets.
C. Designated existing on-site roads may be used for construction traffic.

1.13 PROGRESS CLEANING AND WASTE REMOVAL

A. Maintain areas free of waste materials, debris and rubbish. Maintain site in a clean and orderly condition.
B. Remove debris and rubbish from pipe chases, plenums, attics, crawl spaces and other closed or remote spaces, prior to enclosing the space.
C. Broom and vacuum clean interior areas prior to start of surface finishing and continue cleaning to eliminate dust.
D. Collect and remove waste materials, debris and rubbish from site periodically and dispose off-site.
E. Open free-fall chutes are not permitted. Terminate closed chutes into appropriate containers with lids.

1.14 REMOVAL OF UTILITIES, FACILITIES, AND CONTROLS

A. Remove temporary utilities, equipment, facilities and materials prior to Final Application for Payment inspection.
B. Clean and repair damage caused by installation or use of temporary work.
C. Restore existing facilities used during construction to original condition. Restore permanent facilities used during construction to specified condition.

PART 2 PRODUCTS – NOT USED

PART 3 EXECUTION – NOT APPLICABLE

END OF SECTION

SECTION 01600

MATERIAL AND EQUIPMENT

PART 1 GENERAL

1.1 SECTION INCLUDES

A. Products.
B. Transportation and handling.
C. Storage and protection.
D. Product options.
E. Substitutions.

1.2 RELATED SECTIONS

A. Instructions to Bidders: Product options and substitution procedures.
B. Section 01400 - Quality Control: Product quality monitoring.

1.3 PRODUCTS

A. Do not use materials and equipment removed from existing premises, except as specifically permitted by the Contract Documents.
B. Provide interchangeable components of the same manufacture for components being replaced.

1.4 TRANSPORTATION AND HANDLING

A. Transport and handle Products in accordance with manufacturer's instructions.
B. Promptly inspect shipments to ensure that Products comply with requirements, quantities are correct and products are undamaged.
C. Provide equipment and personnel to handle Products by methods to prevent soiling, disfigurement or damage.

1.5 STORAGE AND PROTECTION

A. Store and protect Products in accordance with manufacturers' instructions.
B. Store with seals and labels intact and legible.
C. Store sensitive Products in weather tight, climate controlled, enclosures in an environment favorable to Product.
D. For exterior storage of fabricated Products, place on sloped supports above ground.
E. Provide bonded off-site storage and protection when site does not permit on-site storage or protection.
F. Cover Products subject to deterioration with impervious sheet covering. Provide ventilation to prevent condensation and degradation of Products.
G. Store loose granular materials on solid flat surfaces in a well-drained area. Prevent mixing with foreign matter.
H. Provide equipment and personnel to store Products by methods to prevent soiling, disfigurement or damage.
I. Arrange storage of Products to permit access for inspection. Periodically inspect to verify Products are undamaged and are maintained in acceptable condition.

1.6 PRODUCT OPTIONS

A. Products Specified by Reference Standards or by Description Only: Any Product meeting those

standards or description is acceptable.

B. Products Specified by Naming One or More Manufacturers: Products of manufacturers named and meeting specifications, no options or substitutions allowed.

C. Products Specified by Naming One or More Manufacturers with a Provision for Substitutions: Submit a request for substitution for any manufacturer not named in accordance with the following article.

1.7 SUBSTITUTIONS

A. Architect/Engineer will consider requests for Substitutions only within 15 days after date established in Notice to Proceed.

B. Substitutions may be considered when a Product becomes unavailable through no fault of the Contractor.

C. Document each request with complete data substantiating compliance of proposed Substitution with Contract Documents.

D. A request constitutes a representation that the Contractor:

1. Has investigated proposed Product and determined that it meets or exceeds the quality level of the specified Product.
2. Will provide the same warranty for the Substitution as for the specified Product.
3. Will coordinate installation and make changes to other Work that may be required for the Work to be complete with no additional cost to Owner.
4. Waives claims for additional costs or time extension that may subsequently become apparent.
5. Will reimburse Owner for review or redesign services associated with re-approval by authorities.

E. Substitutions will not be considered when they are indicated or implied on shop drawing or product data submittals, without separate written request or when acceptance will require revision to the Contract Documents.

F. Substitution Submittal Procedure:

1. Submit three copies of request for Substitution for consideration. Limit each request to one proposed Substitution.
2. Submit shop drawings, product data and certified test results attesting to the proposed Product equivalence. Burden of proof is on proposer.
3. The Architect/Engineer will notify Contractor in writing of decision to accept or reject request.

PART 2 PRODUCTS

Not Used.

PART 3 EXECUTION

Not Used.

END OF SECTION

SECTION 01650

STARTING OF SYSTEMS

PART 1 GENERAL

1.1 SECTION INCLUDES

A. Starting systems.
B. Demonstration and instructions.
C. Testing, adjusting and balancing.

1.2 RELATED SECTIONS

A. Section 01400 - Quality Control: Manufacturers field reports.
B. Section 01700 - Contract Closeout: System operation and maintenance data and extra materials.

1.3 STARTING SYSTEMS

A. Coordinate schedule for start-up of various equipment and systems.
B. Notify Architect/Engineer seven days prior to start-up of each item.
C. Verify that each piece of equipment or system has been checked for proper lubrication, drive rotation, belt tension, control sequence and for conditions that may cause damage.
D. Verify tests, meter readings, and specified electrical characteristics agree with those required by the equipment or system manufacturer.
E. Verify that wiring and support components for equipment are complete and tested.
F. Execute start-up under supervision of applicable manufacturer's representative or Contractors' personnel in accordance with manufacturers' instructions.
G. When specified in individual specification Sections, require manufacturer to provide authorized representative to be present at site to inspect, check and approve equipment or system installation prior to start-up and to supervise placing equipment or system in operation.
H. Submit a written report in accordance with Section 01300 that equipment or system has been properly installed and is functioning correctly.

1.4 DEMONSTRATION AND INSTRUCTIONS

A. Demonstrate operation and maintenance of Products to Owner's personnel two weeks prior to date of Final Completion.
B. For equipment or systems requiring seasonal operation, perform demonstration for other season within six months.
C. Utilize operation and maintenance manuals as basis for instruction. Review contents of manual with Owners' personnel in detail to explain all aspects of operation and maintenance.
D. Demonstrate start-up, operation, control, adjustment, trouble-shooting, servicing, maintenance and shutdown of each item of equipment at agreed time, at equipment location.
E. Prepare and insert additional data in operations and maintenance manuals when the need for additional data becomes apparent during instruction.
F. The amount of time required for instruction on each item of equipment and system that’s specified in individual sections.

PART 2 PRODUCTS
Not Used.

PART 3 EXECUTION
Not Used.

END OF SECTION

SECTION 01700

CONTRACT CLOSEOUT

PART 1 GENERAL

1.1 SECTION INCLUDES

A. Closeout procedures.
B. Final cleaning.
C. Adjusting.
D. Project record documents.
E. Operation and maintenance data.
F. Spare parts and maintenance Products.
G. Warranties.

1.2 RELATED SECTIONS

A. Section 01500 - Construction Facilities and Temporary Controls: Progress cleaning.
B. Section 01650 - Starting of Systems: System start-up, testing, adjusting and balancing.

1.3 CLOSEOUT PROCEDURES

A. Submit written certification that Contract Documents have been reviewed, Work has been inspected, and that Work is complete in accordance with Contract Documents and ready for Architect/Engineer's review.
B. Provide submittals to Owner that is required by governing or other authorities.
C. Submit final Application for Payment identifying total adjusted Contract Sum, previous payments and sum remaining due.

1.4 FINAL CLEANING

A. Execute final cleaning prior to final project assessment. Clean interior and exterior glass, surfaces exposed to view; remove temporary labels, stains and foreign substances, polish transparent and glossy surfaces, vacuum carpeted and soft surfaces.
B. Clean equipment and fixtures to a sanitary condition with cleaning materials appropriate to the surface and material being cleaned.
C. Clean or replace filters of operating equipment used during construction and/or adjustment.
D. Clean debris from roofs, gutters, downspouts and drainage systems.
E. Clean site; sweep paved areas, rake clean landscaped surfaces.
F. Remove waste and surplus materials, rubbish and construction facilities from the site.

1.5 ADJUSTING

A. Adjust operating Products and equipment to ensure smooth and unhindered operation.

1.6 PROJECT RECORD DOCUMENTS

A. Store record documents separate from documents used for construction.
B. Record information concurrent with construction progress.
C. Specifications: Legibly mark and record at each Product section description of actual Products installed, including the following:
   1. Manufacturer's name and product model and number.
   2. Product substitutions or alternates utilized.

3. Changes made by Addenda and modifications.

D. Record Drawings and Shop Drawings: Legibly mark each item to record actual construction including:

1. Measured depths of foundations in relation to finish main floor datum.
2. Measured horizontal and vertical locations of underground utilities and appurtenances, referenced to permanent surface improvements.
3. Measured locations of internal utilities and appurtenances concealed in construction, referenced to visible and accessible features of the Work.
4. Field changes of dimension and detail.
5. Details not on original Contract drawings.

E. Submit documents to Architect/Engineer with claim for final Application for Payment.

1.7 OPERATION AND MAINTENANCE DATA

A. Submit data bound in 8-1/2 x 11 inch (A4) text pages, three D side ring binders with durable plastic covers.

B. Prepare binder cover with printed title "OPERATION AND MAINTENANCE INSTRUCTIONS", title of project and subject matter of binder when multiple binders are required.

C. Internally subdivide the binder contents with permanent page dividers, logically organized; with tab titling clearly printed under reinforced laminated plastic tabs.

D. Submit 1 draft copy of completed volumes 15 days prior to final inspection. This copy will be reviewed and returned with Architect/Engineer comments. Revise content of all document sets as required prior to final submission.

E. Submit two sets of revised final volumes, within 10 days after final inspection.

1.8 SPARE PARTS AND MAINTENANCE PRODUCTS

A. Provide spare parts, maintenance, and extra Products in quantities specified individual specification sections.

B. Deliver to Project site; obtain receipt prior to final payment.

C. Examine system components at a frequency consistent with reliable operation. Clean, adjust and lubricate as required.

D. Include systematic examination, adjustment, and lubrication of components. Repair or replace parts whenever required. Use parts produced by the manufacturer of the original component.

E. Maintenance service shall not be assigned or transferred to any agent or Subcontractor without prior written consent of the Owner.

1.9 WARRANTIES

A. Execute and assemble transferable warranty documents from Subcontractors, suppliers and manufacturers.

B. Submit prior to final Application for Payment.

C. For items of Work delayed beyond date of Final Completion, provide updated submittal within 10 days after acceptance, listing date of acceptance as start of the warranty period.

PART 2 PRODUCTS

Not Used.

PART 3 EXECUTION

Not Used.

END OF SECTION

02100

SITE PREPARATION

PART 1 SCOPE

A. The contractor shall visit the site and carefully examine the conditions of the premises to determine the amount of work and materials required for the work necessary to prepare the site in every respect for the construction of the truck wash.

B. The contractor shall be responsible for determining the quantities of materials to be excavated and handled and for the amount of backfilling, filling and grading to be done in order to perform all work required on the plans.

C. Unused /waste earth material can be stockpiled on site where directed by Owner.

END OF SECTION

02220

EXCAVATING, BACKFILLING AND COMPACTING

PART 1 GENERAL

1.1 SUMMARY

A Excavate, backfill, compact, and grade the site to the elevations shown on the Drawings, as specified herein, and as needed to meet the requirements of the construction shown in the Contract Documents.

B. Related work:

1. Documents affecting work of this Section include, but are not necessarily limited to, General Conditions, Supplementary Conditions and Sections in Division 1 of these Specifications.

1.2 QUALITY ASSURANCE

A. Use adequate numbers of skilled workmen who are thoroughly trained and experienced in the necessary crafts and who are completely familiar with the specified requirements and the methods needed for proper performance of the work of this Section.

B. Use equipment adequate in size, capacity and numbers to accomplish the work of this Section in a timely manner.

C. In addition to complying with requirements of governmental agencies having jurisdiction, comply with the directions of the MoDOT Inspector.

1.3 DELIVERY, STORAGE AND HANDLING

A. N/A

PART 2 PRODUCTS

2.1 SOIL MATERIALS

A. Fill and backfill materials:

1. Provide soil materials free from organic matter and deleterious substances, containing no rocks or lumps over 6" in greatest dimension, and with not more than 15% of the rocks or lumps larger than 2-3/8" in their greatest dimension.
2. Fill material is subject to the approval of the MoDOT Inspector, and are those materials removed from excavations or imported from off-site borrow areas; predominantly granular, non-expansive soils free from roots and other deleterious matter.
3. Do not permit rocks having a dimension greater than 1" in the upper 12" of fill or embankment.
4. Cohesionless material used for structural backfill. Provide sand free from organic material and other foreign matter, and as approved by the MoDOT Inspector.
5. Where granular base is called for under building slabs, provide aggregate complying with the Plan Sheets.

2.2 WEED KILLER (Not in Contract)

A. Provide a dry, free-flowing, dust-free chemical compound, soluble in water, capable of inhibiting growth of vegetation, and approved for use on this Work by governmental agencies having jurisdiction.

2.3 TOPSOIL (Not in Contract)

A. Where and if shown on the Drawings or otherwise required, provide topsoil consisting of friable, fertile soil of loamy character, containing an amount of organic matter normal to the region, capable of sustaining healthy plant life, and reasonably free from subsoil, roots, heavy or stiff clay, stones larger than 2" in greatest dimension, noxious weeds, sticks, brush, litter and other deleterious matter.

B. Obtain topsoil/backfill from sources within the project limits as approved by Owner, or provide imported topsoil obtained from sources outside the project limits or from both sources.

2.4 OTHER MATERIALS

A. Provide other materials, not specifically described but required for a complete and proper installation, as selected by the Contractor subject to the approval of the Architect.

PART 3 EXECUTION

3.1 SURFACE CONDITIONS

A. Examine the areas and conditions under which work of this Section will be performed. Correct conditions detrimental to timely and proper completion of the Work. Do not proceed until unsatisfactory conditions are corrected.

3.2 FINISH ELEVATIONS AND LINES

A. Comply with pertinent provisions of Section 01050.

3.3 PROCEDURES

A. Utilities:
1. Unless shown to be removed, protect active utility lines shown on the Drawings or otherwise made known to the Contractor prior to excavating. If damaged, repair or replace at no additional cost to the Owner.
2. If active utility lines are encountered and are not shown on the Drawings or otherwise made known to the Contractor, promptly take necessary steps to assure that service is not interrupted.
3. If service is interrupted as a result of work under this Section, immediately restore service by repairing the damaged utility at no additional cost to the Owner.
4. If existing utilities are found to interfere with the permanent facilities being constructed under this Section, immediately notify the Architect and secure his instructions.
5. Do not proceed with permanent relocation of utilities until written instructions are received from the Architect.

B. Protection of persons and property:
1. Barricade open holes and depressions occurring as part of the Work, and post warning lights on property adjacent to or with public access.
2. Operate warning lights during hours from dusk to dawn each day and as otherwise required.
3. Protect structures, utilities, sidewalks, pavements and other facilities from damage caused by settlement, lateral movement, washout and other hazards created by operations under this Section.

C. Dewatering:
   1. Remove all water, including rainwater encountered during trench and sub-structure work to an approved location by pumps, drains and other approved methods.
   2. Keep excavations and site construction area free from water.

D. Use means necessary to prevent dust becoming a nuisance to the public, to neighbors and to other work being performed on or near the site.

E. Maintain access to adjacent areas at all times.

3.4 EXCAVATING

A. Perform excavating of every type of material encountered within the limits of the Work to the lines, grades and elevations indicated and specified herein.

B. Satisfactory excavated materials:
   1. Transport to and place in, fill or embankment areas within the limits of the Work.

C. Unsatisfactory excavated materials:
   1. Excavate to a distance below grade as directed by the MoDOT Inspector and replace with satisfactory materials.
   2. Include excavation of unsatisfactory materials and replacement by satisfactory materials, as parts of the work of this Section.

D. Surplus materials:
   1. Dispose of unsatisfactory excavated material, and surplus satisfactory excavated material, away from the site at disposal areas arranged and paid for by the Contractor.

E. Excavation of rock:
   1. Where rocks, boulders, granite, or similar material is encountered, and where such material cannot be removed or excavated by conventional earth moving or ripping equipment, take required steps to proceed with the general grading operations of the Work, and remove or excavate such material by means which will neither cause additional cost to the Owner nor endanger buildings or structures whether on or off the site.
   2. Do not use explosives without written permission from the Architect.

F. Excavate and backfill in a manner and sequence that will provide proper drainage at all times.

G. Borrow:
   1. Obtain material required for fill or embankment in excess of that produced within the grading limits of the Work from borrow areas selected and paid for by the Contractor and approved by the MoDOT Inspector.

H. Ditches and gutters:
   1. Cut accurately to the cross sections, grades and elevations shown.
   2. Maintain excavations free from detrimental quantities of leaves, sticks, trash, and other debris until completion of the Work.
   3. Dispose of excavated materials as shown on the Drawings or directed by the MoDOT Inspector; except do not, in any case, deposit materials less than 3'-0" from the edge of a ditch.

I. Unauthorized excavation:
   1. Unauthorized excavation consists of removal of materials beyond indicated subgrade

elevations or dimensions without specific instruction from the Architect or the MoDOT Inspector.

2. Under footings, foundations, or retaining walls:
   a. Fill unauthorized excavations by extending the indicated bottom elevation of the footing or base to the excavation bottom, without altering the required top elevation.

   b. When acceptable to the soil engineer, lean concrete fill may be used to bring the bottom elevation to proper position.
3. Elsewhere backfill and compact unauthorized excavations as specified for authorized excavations, unless otherwise directed by the soil engineer.

J. Stability of excavations:
1. Slope sides of excavations to 1:1 or flatter, unless otherwise directed by the MoDOT Inspector.
2. Shore and brace where sloping is not possible because of space restrictions or stability of the materials being excavated.
3. Maintain sides and slopes of excavations in a safe condition until completion of backfilling.

K. Excavating for structures:
1. Conform to elevations and dimensions shown within a tolerance of 0.10 ft, and extending a sufficient distance from footings and foundations to permit placing and removing concrete formwork, installation of services, other construction required and for inspection.
2. In excavating for footings and foundations, take care not to disturb bottom of excavation:
   a. Excavate by hand tools to final grade just before concrete is placed.
   b. Trim bottoms to required lines and grades to leave solid base to receive concrete.
3. Excavate for footings and foundations only after general site excavating, filling and grading are complete.

L. Excavating for pavements:
1. Cut surface under pavements to comply with cross sections, elevations and grades.

M. Cold weather protection:
1. Protect excavation bottoms against freezing when atmospheric temperature is less than 35 degrees F.

3.5 FILLING AND BACKFILLING

A. General:
1. For each classification listed below, place acceptable soil material in layers to required subgrade elevations.
2. In excavations:
   a. Use satisfactory excavated or borrowed materials.
3. Under building slabs:
   a. Use subbase materials.
4. Under building slabs:
   a. Use granular fill, if so called for on the Drawings, complying with aggregate acceptable under Section 03300 of these Specifications.

B. Backfill excavations as promptly as progress of the Work permits, but not until completion of the following.
1. Acceptance of construction below finish grade including, where applicable, dampproofing

and waterproofing.

2. Inspecting, testing, approving and recording locations of underground utilities.
3. Removing concrete formwork.
4. Removing shoring and bracing and backfilling of voids with satisfactory materials.
5. Removing trash and debris.
6. Placement of horizontal bracing on horizontally supported walls.

C. Ground surface preparation:

1. Remove vegetation, debris, unsatisfactory soil materials, obstructions and deleterious matter from ground surface prior to placement of fills.
2. Plow, strip, or break up sloped surfaces steeper than one vertical to four horizontal so that fill material will bond with existing surface.
3. When existing ground surface has a density less than that specified under "compacting" for the particular area, break up the ground surface, pulverize moisture-condition to the optimum moisture content and compact to required depth and percentage of maximum density.

D. Placing and compacting:

1. Place backfill and fill materials in layers not more than 8" in loose depth.
2. Before compacting, moisten or aerate each layer as necessary to provide the optimum moisture content.
3. Compact each layer to required percentage of maximum density for area.
4. Do not place backfill or fill material on surfaces that are muddy, frozen or containing frost or ice.
5. Place backfill and fill materials evenly adjacent to structures, to required elevations.
6. Take care to prevent wedging action of backfill against structures by carrying the material uniformly around the structure to approximately the same elevation in each lift.
7. Where the construction includes basement or other underground walls having structural floors over them, do not backfill such walls until the structural floors are in place and have attained sufficient strength to support the walls.

3.6 GRADING

A. General:

1. Uniformly grade the areas within limits of grading under this Section, including adjacent transition areas.
2. Smooth the finished surfaces within specified tolerance.
3. Compact with uniform levels or slopes between points where elevations are shown on the Drawings, or between such points and existing grades.
3. Where a change of slope is indicated on the Drawings, construct a rolled transition section having a minimum radius of approximately 8'0", unless adjacent construction will not permit such a transition or if such a transition defeats positive control of drainage.

B. Grading outside building lines:

1. Grade areas adjacent to buildings to achieve drainage away from the structures and to prevent ponding.

2. Finish the surfaces to be free from irregular surface changes, and:
   a. Shape the surface of areas scheduled to be under walks to line, grade and cross-section, with finished surface not more than 0.10 ft above or below the required subgrade elevation.
   b. Shape the surface of areas scheduled to be under pavement to line, grade and cross-section, with finished surface not more than 0.05 ft above or below the required subgrade elevation.

3.7 COMPACTING

A. Control soil compaction during construction to provide the minimum percentage of density specified for each area as determined according to ASTM D1557.

B. Provide not less than the following maximum density of soil material compacted at optimum moisture content for the actual density of each layer of soil material in place and as approved by the MoDOT Inspector.

1. Structures:
   a. Compact the top 8" of subgrade and each layer of fill material or backfill material at 90% of maximum density.

2. Lawn and unpaved areas:
   a. Compact the top 8" of subgrade and each layer of fill material or backfill material at 90% of maximum density.
   b. Compact the upper 12" of filled areas, or natural soils exposed by excavating, at 85% of maximum density.
3. Walks:
   a. Compact the top 8" of subgrade and each layer of fill material or backfill material at 90% of maximum density.
4. Pavements:
   a. Compact the top 8" of subgrade and each layer of fill material or backfill material at 90% of maximum density.

C. Moisture control:

1. Where subgrade or layer of soil material must be moisture-conditioned before compacting, uniformly apply water to surface of subgrade or layer of soil material to prevent free water appearing on surface during or subsequent to compacting operations.
2. Remove and replace or scarify and air dry, soil material that is too wet to permit compacting to the specified density.
3. Soil material that has been removed because it is too wet to permit compacting may be stockpiled or spread and allowed to dry. Assist drying by disking, harrowing, or pulverizing until moisture content is reduced to a satisfactory value as determined by moisture-density relation tests approved by the MoDOT Inspector.

3.8 MAINTENANCE

A. Protection of newly graded areas:

1. Protect newly graded areas from traffic and erosion, and keep free from trash and weeds;
2. Repair and establish grades in settled, eroded and rutted areas to the specified tolerances.

B. Where completed compacted areas are disturbed by subsequent construction operations or adverse weather, scarify the surface, reshape and compact to the required density prior to further construction.

END OF SECTION

SECTION 02320

EARTHWORK AND TRENCHING (Utilities)

PART 1 GENERAL

1.1 SUMMARY

A. The Contractor shall perform all excavation, embankment, trenching, backfilling, cushioning, surface dressing, dewatering, shoring, surface restoration and disposal of waste as required for site grading, structures, piping, and appurtenances as shown on the Drawings.

1.2 SECTION INCLUDES

A. Disposal of materials.

B. Tree removal.

C. Site clearing and preparation.

D. Excavation.

E. Construction of fills and embankments.

F. Trenching.

G. Pipe embedment requirements.

H. Pipe embedment schedule.

I. Crushed rock.

J. Backfilling.

1.3 RELATED SECTIONS

A. Section 02530 - Piping System Products.

B. Section 02535 - Piping Systems Installation.

C. Section 02922 - Seeding.

D. Section 03300 - Miscellaneous Concrete.

1.4 REFERENCES: The following publications form a part of these specifications to the extent indicated by references thereto. The revision in effect at the time of the Bid Opening shall be applicable. If these publications conflict with the requirements of this section, the section requirements shall govern.

A. American Society for Testing Materials (ASTM):
1. D-698 - Moisture-Density Relations Of Soils, Using 5.5 Pound (2.5 kg) Rammer And 12-Inch (304.8 mm) Drop.
2. D-1577 - Test Method for Laboratory Compaction of Soil Using Modified Effort.
3. D-1140 - Test Method for Amount of Material in Soils Finer Than the No. 200 (75μm) Sieve.

4. D-2922 - Standard Test Methods for Density of Soil and Soil-Aggregate in Place by Nuclear Methods (Shallow Depth).
5. D-3017 - Standard Test Methods for Water content of Soil and rock by Nuclear Methods.

1.5 SUBMITTALS: The Contractor shall submit the following items required by this division in accordance with Section 01300 - Submittals.

A. Product data for review: Soil test results as specified herein for soil testing.

1.6 DEFINITIONS

A. Earth excavation: Earth excavation is defined as the removal of all material whose removal is not defined as rock excavation.

B. Pipe embedment: Pipe embedment is defined as soil or stone aggregate material placed under, around, and in some cases over the pipe. The material type and extent of embedment is specified herein and shown on the Drawings.

C. Trench backfill: Trench backfill is defined as soil or stone aggregate material placed in a pipe or utility trench, above the pipe embedment and up to the existing ground surface, finished grade, or the bottom of pavement.

D. Structure backfill: Structure backfill is defined as soil or stone aggregate material placed around or above subsurface structures, such as manholes, vaults, foundations, and wetwells.

1.7 MAINTENANCE OF WORK: The Contractor shall be responsible for the satisfactory compaction and maintenance of all completed excavation, embankment, and backfill. If, prior to the expiration of the General Guaranty period stipulated in the Front End Documents, any grades or subgrades are found to have settled or eroded, they shall be reworked immediately by the Contractor and restored to the specified grades, and the surface restored.

PART 2 PRODUCTS

2.1 GENERAL

A. Materials shall conform to the respective references listed above and other requirements specified herein.

B. Topsoil, and material required for structural backfill and trench backfill in excess of suitable material excavated from trenching and structural excavation shall be furnished by the Contractor at no additional cost to the Owner.

2.2 PIPE EMBEDMENT MATERIAL

A. Granular Embedment Material: Granular embedment material for installation in pipe trenches and other locations indicated on the Drawings shall be crushed stone conforming to the 2007 MCIB Concrete Standards, Section 2.1.D for coarse aggregate meeting the gradation specified under Column IV, Table 2.1.D-1 for ½-inch aggregate with the modification that the maximum allowable percentage of material finer than No. 200 sieve shall be between 2.0% and 5.0% as determined by ASTM C-117. The gradation is repeated below for information:

Sieve Size	Percent Passing
3/4"	100

1/2"	80 - 100
3/8"	40 - 70
No. 4	0 - 15
No. 8	0 - 5
No. 200	0 - 3

2.3 CRUSHED ROCK: Crushed rock for use beneath concrete slabs and structures, and in other locations shown on the Drawings, shall be freely draining, siliceous gravel or crushed stone aggregate, conforming to 1999 Missouri Standard Specifications for Highway Construction, Section 1007, Type 1007.4.3. The gradation is repeated below for information:

Sieve Size	Percent Passing
1"	100
1/2"	55 - 90
No. 4	8 - 40
No. 10	0 - 15
No. 200	0 - 4

2.4 FILL MATERIALS

A. Random Fill Material: Random fill material for earthfills, embankments and other uses, shall be a soil material which is free from: rocks or stones larger than 6 inches in greatest dimension, brush, stumps, logs, roots, debris, top soil, and organic or harmful materials. The portion of fill material passing the No. 40 sieve shall have a liquid limit not exceeding 40 and a plastic limit not exceeding 25, when tested in accordance with ASTM D-4318. To the extent possible, site excavated material may be used. Random fill material shall be imported if suitable soil material is not available on site.

B. Select Fill Material: Select fill material shall be a sorted, job-excavated or imported soil material as specified for random backfill material, except no rocks, stones, or lumps larger than one inch in largest dimension shall be present. Select fill material, used for filling beneath or against structures, shall not contain weathered shale.

C. Granular Fill Material:

1. Granular fill material shall be a densely graded gravel of the following gradation:

Sieve Size (square opening)	Percent Passing (by weight)
1 inch	100
3/4 inch	85 - 100
3/8 inch	50 - 80
No. 4	35 - 60
No. 40	15 -25

No. 200 5 -15

2. Granular fill material shall be free from clay lumps or organic matter. The fraction passing the No. 4 sieve shall have a liquid limit not greater than 25 and a plasticity index not greater than 5. The fraction passing the No. 200 sieve shall not exceed ¾ of the fraction passing the No. 40 sieve.

2.4 IMPERVIOUS TRENCH CHECK MATERIAL

A. Material for impervious trench checks shall be naturally occurring clay or a soil and sodium bentonite mixture with the permeability of the material to be no greater than $10x10^{-6}$ cm/sec.

B. Material shall be free of any stones, bricks, concrete, etc., except gravel or crushed rock of 3/4 inch size or less.

PART 3 EXECUTION

3.1 PREPARATION

A. The Contractor shall verify that required lines, levels, contours and datum are as shown in the plans.

B. Grading, excavation and backfilling shall be made to the lines, grades and cross sections indicated in the plans.

C. The Contractor shall maintain the site and conduct earthwork operations to ensure that the property is well drained at all times. The Contractor shall protect adjacent and downstream properties from damage or pollution caused by erosion. The Contractor is responsible for erosion control measures and methods and shall conduct earthwork operations to ensure the protection of all downstream and adjacent properties. The Contractor shall implement any additional erosion control measures to prevent damage.

D. Existing Utilities:
1. The Contractor shall verify the location and depth of all utilities a minimum of 24 hours prior to construction. The Contractor may utilize the toll free number for the "Missouri One Call System" 1-800-344-7483. This number is applicable anywhere within the state of Missouri. Prior to commencement of work the Contractor shall notify all those companies which have facilities in the vicinity of the construction.
2. Coordinate removal or relocation of existing utilities with their Owner.
3. Locate, identify and protect utilities that remain from damage. The Contractor shall make every reasonable effort to protect all existing utilities from damage. If any utility is damaged through the carelessness or negligent actions of the Contractor, the utility shall be repaired by its owner at the Contractor's expense.
4. Abandoned pipes which the Drawings indicate shall be capped or filled do not need to be removed. All other abandoned pipe conduit within the limits of grading shall be removed by the Contractor

E. Existing fences: Fences within the construction grading area shall be removed and reconstructed to equal or better quality than that of the fence removed. It shall be the sole responsibility of the Contractor to maintain all gates, fences, cattle guards and the like encountered during construction, as required to prevent the straying of pets and livestock.

3.2 CLASSIFICATION OF MATERIALS: No classification of excavated materials, regardless of type or condition, will be made for purposes of payment. All excavation shall be unclassified. Excavation and trenching work shall include the handling and removal of all materials, regardless of its nature, excavated or removed from the site in performance of the Work. No separate payment will be made for rock.

3.3 SITE CLEARING

A. Clearing and stripping: All stumps, roots, buried logs, foundations, drainage structures, or other miscellaneous debris occurring within the limits of the excavation and site grading shall be removed as part of the grubbing operations and disposed of by, and at the expense of, the Contractor. Like-wise, six inches of topsoil shall be stripped from the disturbed construction areas and stockpiled for later use in final grading.

B. Stumps and roots in excavated or fill areas where depth of fill does not exceed 3 feet shall be removed to a depth of 18 inches below subgrade. In fill areas where more than 3 feet of fill is required, roots and stumps shall be cut off at the face of the excavation.

3.4 SUBGRADE PREPARATION

A. Proof-roll subgrade below building slabs, tank slabs, and pavements with heavy pneumatic-tired equipment to identify soft pockets and areas of excess yielding. Do not proof-roll wet or saturated subgrades.
   1. Completely proof-roll subgrade in one direction, repeating proof-rolling in direction perpendicular to first direction. Limit vehicle speed to 3 mph.
   2. Proof-roll with a loaded 10-wheel, tandem-axle dump truck weighing not less than 15 tons.
   3. Excavate soft spots, unsatisfactory soils, and areas of excessive pumping or rutting, as determined by Engineer, and replace with compacted backfill or fill as directed.
   4. Subgrades under building slabs shall be compacted in place to ninety-five percent (95%) of maximum density as determined by ASTM D-698, at a moisture content within plus or minus two percent (±2%) of optimum.

B. Reconstruct subgrades damaged by freezing temperatures, frost, rain, accumulated water, or construction activities, as directed by Engineer, without additional compensation.

3.5 EARTHFILLS AND EMBANKMENTS

A. Material and Compaction Requirements:
   1. Fill areas which are below structures, concrete slabs, or paved areas, and within 5 horizontal feet of a structure or concrete slab shall be filled with select fill material, as specified herein, unless otherwise indicated on the Drawings. The select fill material shall be placed in lifts not exceeding 12 inches in compacted thickness, and shall be compacted to a minimum 95 percent of maximum density as determined by ASTM D-698. Fill shall be placed and compacted at a moisture content within ± 2 percent of optimum.
   2. Fill areas which are outside the envelope described above shall be filled with random fill material, as specified herein, unless otherwise indicated on the Drawings. The random fill material shall be placed in lifts not exceeding 12 inches in compacted thickness, and shall be compacted to a minimum 90 percent of maximum density as determined by ASTM D-698. Fill shall be placed and compacted at a moisture content within ± 3 percent of optimum.
      a. For areas which will be surfaced with gravel, the top two feet of random fill shall be compacted to a minimum of 95 percent of maximum density as determined by ASTM D-698. Fill shall be placed and compacted at a moisture content within ± 2 percent of optimum.

B. All vegetation and topsoil, and any loose, unstable or unsuitable material shall be removed from the existing surface to receive fill material. After stripping, the area shall be proof-rolled with a loaded tandem axel dump truck, or other equipment acceptable to Engineer. Unstable materials located by proof-rolling, shall be removed and replaced with suitable compacted fill material.

C. Before placing any fill the existing surface shall be scarified, moisture conditioned as required and the top 6 inches compacted to 90 percent of the maximum density for that material in accordance with ASTM D-698.

D. When embankments, regardless of height, are placed against hillsides or existing embankments having a slope steeper than 1 vertical to 4 horizontal, the existing slope shall be benched or stepped in approximately 24 inch rises. The material shall be bladed out and the bottom area cut to form benches and the embankment material being placed shall be compacted to the specified density. Formation and compaction of benches shall not be measured and paid for directly but will be considered incidental work.

E. Where embankments of two feet or less are placed over existing pavement, the existing pavement shall be removed and the cleared surface compacted to the specified density. Where embankments greater than two feet are placed over existing pavement, the pavement shall be broken into pieces with a maximum dimension of 24 inches and the pieces left in place.

F. Do not place fill material over porous, wet, frozen or spongy surfaces. Embankment construction shall not be performed when fill material is frozen or contains frost or snow.

G. Placement: Place earth embankments in successive horizontal lifts uniformly distributed over the full width of the fill area. Each lift shall not exceed the specified thickness and shall be compacted to the specified density prior to placing any additional lifts. As compaction of each layer progresses, continuous blading and dozing will be required to level the surface and insure uniform compaction.

H. No rocks or stones shall be placed in the upper 18 inches of any fill or embankment. Rocks or stones within the size limit may be incorporated in the remainder of fills and embankments, provided they are distributed so they do not interfere with proper compaction, as determined by the Engineer.

3.6 EXCAVATION

A. General:

1. Where necessary, satisfactory sheeting and bracing shall be used to hold the sides of the excavation at all points where damage might result from slides.
   a. All sheeting and bracing shall be removed as the backfill is placed, unless otherwise directed in writing by the Owner or shown on the Drawings. All voids left or caused by the withdrawal of sheeting shall be filled immediately with suitable material and tamped.
2. Excavation below structure or trench subgrade:
   a. Over excavation of pipe trenches due to Contractor's oversight, shall be backfilled with granular embedment material compacted in 8-inch lifts to 90 percent of the maximum density for that material in accordance with ASTM D-698, as required at no additional cost to the Owner.
   b. Over excavation of structure subgrades, shall be replaced with concrete placed monolithic with the structure above.
   c. When unstable or unsuitable material is encountered in the subgrade, such material shall be removed, replaced with crushed rock (for structures) or granular pipe embedment material (for trenches) and compacted to the density equal to or greater than required for subsequent backfill material. Such excavation and backfill shall be done at no additional cost to Owner.
   d. When the subgrade bottom is soft and in the opinion of the Engineer cannot support the foundation, a further depth and/or width shall be excavated and refilled to the desired pipe or foundation grade with crushed rock, as required by the Engineer to assure a firm foundation. Such excavation and backfill shall be done at no additional cost to Owner.

3. No blasting of any kind for rock excavation or for other purposes will be permitted unless permission is given in writing from the Owner.
4. Dewatering: Each excavation shall be kept dry during subgrade or pipe embedment preparation, and continually thereafter until the structure or pipe is completely installed, to the extent that no damage from hydrostatic pressure, flotation, or other cause will result.
   a. All excavations for concrete structures or trenches which extend down to or below groundwater shall be dewatered by lowering and keeping the groundwater level at least 12 inches below the bottom of the excavation.
   b. Trenches shall be drained so that workmen may work efficiently. The discharge of pumps used for draining the trenches shall be led to natural drainage courses or drains.

B. Structure Excavation:
1. Excavation for structures shall be performed to the limits indicated on the Drawings.
2. All suitable material removed by excavation shall be used as far as practicable for backfill and embankment as required to complete the work. The Contractor shall sort all excavated material and stockpile suitable material as necessary. Stockpile excavated material to be used as fill and backfill in area designated on site and remove excess material or unsuitable material not being reused, from site.

C. Trenching:
1. All pipeline excavation shall be open cut. The Contractor shall not open more trench in advance of the pipe laying than is necessary. The length of open trenches shall be limited depending on the nature of the soil and safety considerations. All open trenches shall be adequately protected using fencing, barricades, etc. as required.
2. Trenches shall be excavated within the limits of public right-of-way in conformance with the requirements herein. Trenches shall be excavated to the width and depth necessary to install sewer pipe to the lines, grades and elevations shown on the Drawings.
3. In those areas designated to be landscaped, seeded or sodded, the top soil shall be excavated, stockpiled and replaced as specified herein.
4. The Contractor shall not open more trench in advance of pipe laying than is necessary to expedite the work. One city block or 300 feet, whichever is the shorter, shall be the maximum allowable length of open trench ahead of pipe laying.
5. Limiting trench widths: Trenches shall be excavated to a width which will provide adequate working space and pipe clearances for proper pipe installation, jointing, and placement and compaction of embedment. However, the limiting trench widths below an elevation 12 inches above the top of the installed pipe shall be as follows:

Pipe Size (inches)	Minimum Trench Width (inches)	Min. Clearance on Each Side of Pipe (inches)	Maximum Trench Width (inches)
< 4	20	6	26
4 - 6	22	6	30
8	22	6	30
10	24	6	32
12	27	6	36
15	30	6	38
16	32	6	40
18	34	6	42

6. Unauthorized trench widths: Where, for any reason, the width of the lower portion of the trench as excavated at any point exceeds the maximum permitted in the foregoing table, either pipe of adequate strength, special pipe embedment, or arch concrete encasement, as required by loading conditions and as determined by the Engineer, shall be furnished and installed by and at the expense of the Contractor.
7. Trench bottom in earth: The trench in earth shall have a flat bottom the full width of the trench and shall be excavated to the grade to which the embedment is to be laid. The surface shall be graded to provide a uniform bearing and continuous support. No part of the bell shall be in contact with the trench bottom.
8. The Contractor shall sort and stockpile excavated material so that suitable material is available for backfill. Excavated material shall be deposited on the side of the trenches and beyond the reach of slides. Excavated material not suitable for backfill shall be promptly removed from the site.
9. Where necessary to reduce earth load on trench banks to prevent sliding and caving, banks may be cut back on slopes, but sloping trench walls shall not extend lower than 1 foot above the top of the pipe.
10. Trench Shields: Where trench shields are used by the Contractor, no part of the shield shall exceed lower than 6 inches above the top of the pipe, nor shall the maximum allowable trench width be exceeded.

3.7 PIPE EMBEDMENT

A. Embedment Classes: Embedment classes shall be as follows, and as detailed on the Drawings. All lifts are given in compacted thickness. All compaction percentages refer to maximum dry density as determined by ASTM D-698. Select fill material shall be compacted within 2% of optimum moisture content. Select fill material shall be replaced with granular fill material if granular fill material is required for trench fill to ground surface.

1. Class A Embedments:
   a. Class A-1 embedment shall provide a cradle of concrete with a compressive strength of at least 3,000 psi, as specified in Section 03300 - Miscellaneous Concrete. After the initial set of the concrete, granular embedment material shall be placed in 6-inch lifts and compacted to a minimum of 90%, above the top of pipe.
   b. Class A-2 embedment shall provide an arch of concrete with a compressive strength of at least 3,000 psi, as specified in Section 03300 - Miscellaneous Concrete. Granular embedment material shall be placed in 6-inch lifts and compacted to a minimum of 90%, up to the centerline of the pipe. A concrete arch shall be placed on the granular embedment. After the concrete has set, one foot of select fill material shall be placed above the top of pipe, compacted in 8-inch lifts to a minimum of 85%.
2. Class B Embedments:
   a. Class B-1 embedment shall provide an encasement of granular embedment material, extending below the pipe to above the top of pipe. Granular embedment material shall be placed in 6-inch lifts and compacted to a minimum of 90%.
   b. Class B-2 embedment shall provide a cradle of granular embedment material which shall be placed in 6-inch lifts and compacted to a minimum of 90%. Select fill material shall then extend above the top of the pipe, placed in 8-inch lifts and compacted to 85%.
3. Class C Embedment: Materials and compaction requirements shall be as for Class B-2.
4. Class D Embedment: Shall allow the pipe to rest on a flat or restored trench bottom. Pipe embedment shall be select fill material extending from the bottom of the pipe to above the top of pipe, placed in 12-inch lifts and compacted to 85%.

5. Class E Embedment: Shall provide a cradle of granular embedment material which shall be placed in 6-inch lifts and compacted to a minimum of 90%. Select fill material shall then extend above the top of the pipe, placed in 12-inch lifts and compacted to 85%.

B. Concrete Encasement: Where indicated on the Drawings, concrete encasement shall be provided instead of the pipe embedment classes specified herein. Requirements for concrete encasement are detailed on the Drawings. Concrete and reinforcement shall be as specified in Section 03300 - Miscellaneous Concrete, for 3,000 psi concrete.

C. Pipe Embedment Class Schedule: Unless otherwise noted on the Drawings, pipe embedment classes shall be provided according to the following schedule:

Pipe Material		Depth over pipe (feet)	Embedment class
SDR-35 PVC		All	B-1
Class 200 PVC in soil		All	D
Class 200 PVC in rock		All	E
SDR-PR PVC, SCH 40/80 PVC		All	B-1
C-900 PVC		All	B-1
HDPE (polyethylene)		All	B-2
DIP in soil	up to 12-inch	minimum 3 ft	D
	over 12-inch	minimum 3 ft	E
DIP in rock	all sizes	minimum 3 ft	E
Copper		All	E
Other types not listed here		All	B-2

D. Placement of Embedment:

1. Place embedment material at the trench bottom with proper allowance for bell joints. Level materials in continuous layers not exceeding 6 inches in compacted depth. Shovel slicing of embedment shall be performed along the sides of the pipe as embedment is placed, to consolidate the bedding and haunching below the pipe.
2. Consolidate granular embedment by rodding, spading and compacting as necessary to provide uniform pipe support and meet the compaction requirement.

3.8 CRUSHED ROCK: Crushed rock shall be placed when shown on the Drawings or specified herein. Crushed rock shall be placed on suitably prepared subgrade and compacted by vibration. Crushed rock shall be kept free from dust, clay or trash. Crushed rock shall be compacted to not less than 90 percent of the maximum density for that material in accordance with ASTM D-1557.

3.9 BACKFILLING

A. General:

1. All trenches and excavations around structures shall be backfilled to finish grade according to the Drawings. Backfill with material as specified herein.
2. Large compaction equipment, including self propelled compaction equipment, bulldozers, loaders, and boom-mounted vibratory plates, shall not be used within 3 feet above the top of pipe, or within 3 feet of new or existing structures.
3. If backfilling operations do not meet the specifications, the material shall be removed, replaced and recompacted at the Contractor's expense.
4. Backfill shall not be placed when material is frozen, contains frost, snow, waste material, trees, organic matter and rubbish or when the surface to receive backfill is snow covered or frozen.
5. No backfill shall be placed over or around any structure until the concrete or mortar has attained a minimum compressive strength of 2,000 psi and can support the loads imposed by backfilling and traffic.

B. Trench backfill: Backfill for all pipeline trench excavation shall be placed by the end of each working day around all pipe laid that day, leaving only the working end of the pipe uncovered. Any trenches excavated in advance of pipe laying shall also be backfilled at the end of each working day.
1. For trenches beneath proposed structures, slabs, or in areas which have or will have a paved or chip-and-seal surface, or where indicated on the Drawings to use granular fill material:
   a. Granular fill material shall be shall be placed on the compacted pipe embedment, in layers not to exceed 12 inches in compacted thickness.
   b. Granular fill material shall be compacted by vibratory means. Each lift of granular fill shall be compacted to a minimum 95 percent of maximum density as determined by ASTM D-698. Backfill shall be placed and compacted at a moisture content within plus 2 or minus 2 percent of optimum. Extreme care shall be used in compaction operations to prevent compacting equipment from contacting the pipe.
2. For trenches in graveled areas, or other vehicle traveled ways which are neither paved nor surfaced with chip-and-seal material:
   a. Select fill material shall be placed on the compacted pipe embedment, in layers not to exceed 12 inches in compacted thickness.
   b. Select fill material shall be compacted to a minimum of 90 percent of maximum density as determined by ASTM D-698. Backfill shall be placed and compacted at a moisture content within plus 3 or minus 3 percent of optimum. Select backfill may be compacted by vibratory plates, tracks or wheels of graders, tractors, high loaders or similar equipment, subject to the restrictions above. Extreme care shall be used in compaction operations to prevent compacting equipment from contacting the pipe.
3. For trenches in other areas, including grassed areas and parkways which are not in vehicle traveled ways:
   a. Random fill material shall be placed on the compacted pipe embedment, in layers not to exceed 18 inches in compacted thickness.
   b. Random fill material shall be compacted to a minimum of 85 percent of maximum density as determined by ASTM D-698. Backfill shall be placed and compacted at a moisture content within plus 3 or minus 3 percent of optimum. Backfill may be compacted by vibratory plates, tracks or wheels of graders, tractors, high loaders or similar equipment, subject to the restrictions above. Extreme care shall be used in compaction operations to prevent compacting equipment from contacting the pipe.

C. Structure backfill:
1. All structures shall be backfilled to the lines and grades shown on the Drawings. In no instance shall backfill be dumped, bull-dozed or otherwise deposited in bulk upon the structure. Backfill shall be kept at approximately the same elevation on all sides of the structure as backfilling proceeds.

2. Structure backfill which will be beneath paved areas, slabs, or structures shall be granular fill material, compacted in place to 95% of maximum density as determined by ASTM D-698, at a moisture content within plus 2 or minus 2 percent of optimum. Granular fill shall be placed in lifts not to exceed 8 inches in compacted thickness, and compacted by careful pneumatic or vibratory tamping.
3. Backfill in all other areas shall be select fill material, placed in lifts not to exceed 12 inches in compacted thickness, and compacted in place to 90% of maximum density as determined by ASTM D-698, at a moisture content within plus 3 or minus 3 percent of optimum.

3.10 SURFACE RESTORATION

A. All areas disturbed by construction operations shall be restored by paving, gravel surfacing, or seeding, as indicated on the Drawings and specified. For areas which are seeded, minimum depth of topsoil shall be six inches. Topsoil shall be a dark, friable, organic soil free of clay lumps and rocks larger than one and half inches in largest dimension.

3.11 IMPERVIOUS TRENCH CHECK

A. Trench checks shall be placed where indicated on the Drawings. If a pipeline segment is at least 100 feet but less than 400 feet, one trench check shall be provided in a location acceptable to the Engineer.

B. Trench checks shall extend the full width of the trench, and the length and depth shall be as indicated on the Drawings. Trench check material shall be placed completely under, around and above pipe, and shall be placed in maximum compacted lifts of 8 inches in thickness and compacted to 95% of maximum density as determined by ASTM D-698. Extreme care shall be used in compaction operations to prevent compacting equipment from contacting the pipe.

3.12 DISPOSAL OF MATERIALS

A. All unused excess excavated material, together with all debris, removed pipe, stones, stumps, roots, and other unsuitable materials shall be removed from the site and disposed of by the Contractor, at the expense of the Contractor.

B. Material to be disposed of, including excess material, shall be promptly removed from the site by Contractor. If Contractor desires to set aside excess excavated material free from contamination by sewage or other hazardous substances, he shall do so only in an area approved by the Owner.

3.13 SOIL TESTING: All materials, for fills and for impervious trench checks (if required), shall be sampled and tested in accordance with Section 01400 - Quality Control.

A. Laboratory Tests:
1. Two initial gradation tests and two initial moisture-density (Proctor) tests shall be made for each type of embedment, backfill, and trench check material, including job excavated materials.
   a. Initial tests on materials which are imported (not job excavated) shall be provided by Contractor and the results submitted as product data for review in accordance with the submittals section.
2. One additional gradation test and one additional moisture-density test shall be made for each additional 400 tons of imported material, and such tests shall be paid for by Contractor.

B. Field Tests:
1. During the progress of the work of filling and backfilling, in-place density tests will be performed with a nuclear density gage by a qualified laboratory technician.

2. The number of tests to be taken and the locations thereof shall be determined by the Engineer based upon observation of the filling or backfilling process. A minimum of two (2) tests per 100 cubic yards of fill/backfill and two (2) tests per 300 feet of trench will be taken unless otherwise directed by the Engineer. One additional test will be performed on each trench check (if required).
3. If the tests indicate the compaction is not sufficient, the Contractor shall increase the compactive effort on all such inadequately compacted areas.

END OF SECTION

SECTION 02530

PIPING SYSTEM PRODUCTS

PART 1 GENERAL

1.1 SUMMARY

A. The Contractor shall furnish all required piping, fittings, and all accessories for complete and functional piping systems as shown on the Drawings and specified herein.

B. Section Includes:
1. Piping materials for water distribution piping, sanitary drain piping, piping outside of buildings, and other services.
2. Pipe fitting and accessories.

C. This section does not cover piping installation. See Section 02535 - Piping Systems Installation

1.2 RELATED SECTIONS

A. Section 02320 - Earthwork and Trenching: For trenching, embedment, and backfill.

B. Section 02605 – Precast Manholes and Vaults

1.3 REFERENCES: The following publications form a part of these specifications to the extent indicated by references thereto. The revision in effect at the time of the Bid Opening shall be applicable. If these publications conflict with the requirements of this section, the requirements of this section shall govern.

A. American Society for Testing Materials (ASTM):
1. A-193 - Specification for Alloy-Steel and Stainless Steel Bolting Materials for High-Temperature Service.
2. A-194 - Specification for Carbon and Alloy Steel nuts for bolts for High-Pressure and High-Temperature Service.
3. A-194 - Specification for Carbon and Alloy Steel nuts for bolts for High-Pressure and High-Temperature.
4. B-88 - Specification for Seamless Copper Water Pipe.
5. D-1784 - Rigid Poly (Vinyl Chloride) Compounds and Chlorinated Poly (Vinyl Chloride) Compounds.
6. D-1785 - Poly (Vinyl Chloride)(PVC) Plastic Pipe, Schedules 40, 80, 120.
7. D-2241 - Poly (Vinyl Chloride) Pressure-Rated Pipe (SDR Series).
8. D-2464 - Threaded Poly (Vinyl Chloride)(PVC) Plastic Pipe Fittings, Schedule 80.
9. D-2467 - Socket-type Poly (Vinyl Chloride)(PVC) Plastic Pipe Fittings, Schedule 80.
10. D-2564 - Solvent Cements for Poly (Vinyl Chloride) (PVC) Plastic Pipe and Fittings.
11. D-2837 - Obtaining Hydrostatic Design Basis For Thermoplastic Pipe Materials.
12. D-3034 - Type PSM Poly Vinyl Chloride (PVC) Sewer Pipe and Fittings.
13. D-3139 - Joints for Plastic Pressure Pipes Using Flexible Elastomeric Seals.
14. D-3212 - Joints for Drain and Sewer Plastic Pipe Using Flexible Elastomeric Seals.
15. F-437 Specification for Threaded Chlorinated Poly (Vinyl Chloride) (CPVC) Plastic Pipe Fittings, Schedule 80.
16. F-439 Specification for Socket Type Chlorinated Poly(Vinyl Chloride) (CPVC) Plastic Pipe Fittings, Schedule 80.
17. F-441/F-441M Specification for Chlorinated Poly(Vinyl Chloride) (CPVC) Plastic Pipe, Schedules 40 and 80.
18. F-493 Standard Specification for Solvent Cements for Chlorinated Poly(Vinyl Chloride) (CPVC) Plastic Pipe and Fittings.

19. F-477 - Elastomeric Seals (Gaskets) for Joining Plastic Pipe.
20. F-679 - Poly (Vinyl Chloride) (PVC) Large-Diameter Plastic Gravity Sewer Pipe and Fittings.
21. F-1970 Standard Specification for Special Engineered Fittings, Appurtenances or Valves for use in Poly (Vinyl Chloride) (PVC) or Chlorinated Poly (Vinyl Chloride) (CPVC) Systems.

B. American National Standards Institute (ANSI)/American Water Works Association (AWWA):
1. C104/A21.4 - Cement-Mortar Lining for Ductile Iron Pipe and Fittings for Water.
2. C105/A21.5 - Polyethylene Encasement for Ductile Iron Pipe Systems.
3. C110/A21.10 - Ductile-Iron and Gray-Iron Fittings 3 In. Through 48 In.
4. C111/A21.11 - Rubber Gasket Joints for Ductile Iron Pressure Pipe and Fittings.
5. C115/A21.15 - Flanged Ductile Iron Pipe With Ductile-Iron or Gray-Iron Threaded Flanges.
6. C150/A21.50 - Thickness Design of Ductile Iron Pipe.
7. C151/A21.51 - Ductile-Iron Pipe, Centrifugally Cast, for Water or Other Liquids.
8. C153/A21.53 - Ductile Iron Compact Fittings 3 In. Through 24 In. and 54 In. Through 64 In. For Water Service.

C. American Water Works Association (AWWA):
1. C900 - Polyvinyl Chloride (PVC) Pressure Pipe and Fabricated Fittings, 4 in. Through 12 in., for Water Distribution.
2. C905 - Polyvinyl Chloride (PVC) Pressure Pipe and Fabricated Fittings, 14 in. Through 48 in., for Water Transmission and Distribution.

D. Uni-Bell PVC Pipe Association:
1. Uni-B-13-92 - Uni-Bell PVC Pipe Association “Recommended Performance Specification for Joint Restraint Devices for Use With Polyvinyl Chloride (PVC) Pipe.

1.4 DEFINITIONS

A. Embedment: Fill placed under, beside and directly over pipe, prior to subsequent backfill operations.

1.5 SUBMITTALS: The Contractor shall submit the following items required by this division in accordance with Section 01300 - Submittals.

A. Product Data for Review:
1. Pipe and joint materials and details.
2. Details and materials of fittings, pipe accessories, and specials.
3. Specifications, data sheets, and affidavits of compliance for protective shop coatings and linings.
4. Pressure gauge certification and calibration data.

B. Manufacturer’s Certificates: Contractor shall furnish the following prior to shipment:
1. Affidavit of compliance with applicable standard.
2. Test certificates.

C. Manufacturer's Installation Instructions: Indicate special procedures required to install products specified.

1.6 PROJECT RECORD DOCUMENTS

A. Requirements for project record documents are covered under section 02530 - Piping Systems Installation.

PART 2 PRODUCTS

2.1 PIPE MATERIALS

A. Notes on Materials: Each pipe material below is given an alphanumeric abbreviation shown in parentheses, which is shown on the Drawings to denote the applicable specified material for the given size and service.

B. Type PSM Polyvinyl Chloride Sewer Pipe and Fittings (SDR-35 PVC): Shall meet the requirements of ASTM D-1784 cell classification 12454-B for PVC compounds, and ASTM D-3034 for poly vinyl chloride (PVC) sewer pipe.
   1. Minimum wall thickness shall conform to Standard Dimension Ratio 35 (SDR 35), except for 4-inch diameter pipe which shall conform to SDR 26.
   2. The Contractor shall install the maximum pipe lengths manufactured by the supplier.
   3. Joints: Flexible gasketed joints for PVC pipe and fittings shall be compression type joints with the gasket confined in either the spigot or the bell end of the pipe. Rubber gasket rings shall be neoprene or other synthetic material and conform to ASTM D-3212 and ASTM F-477. Natural rubber gaskets will not be acceptable.
   4. Fittings: Fitting joints shall be bell and spigot with elastomeric gaskets conforming to ASTM D-3212,, unless indicated on the Drawings to be solvent cemented joints, in which case the joint shall conform to ASTM D-2855. Fittings shall not be used unless directed by the Engineer or indicated on the Drawings.

C. Polyvinyl Chloride Plastic Pressure Pipe, Joints, and Fittings (SDR 21 PVC or Class 200): Shall meet the requirements of ASTM D-1784 cell classification 12454-A or 12454-B for PVC compounds, and ASTM D-2241 for (PVC) pressure pipe.
   1. Minimum wall thickness shall conform to Dimension Ratio 21 for Class 200.
   2. The Contractor shall install the maximum pipe lengths manufactured by the supplier.
   3. Joints: Joints shall be push-on type with integral bell and spigot and elastomeric gaskets meeting the requirements of ASTM D-2122 and ASTM D-3139. An integral wall-thickened bell end or an integral sleeve-reinforced bell end will be acceptable. Rubber gasket rings shall be neoprene or other synthetic material and conform to ASTM F-477. Natural rubber gaskets will not be acceptable.
      a. Bell restraint clamps: Clamps for restraining bell and spigot joints shall consist of clamping rings and rods, and shall meet the requirement of Uni-B-13-92. Restraint devices shall be of ductile iron, ASTM A536, Grade 65-45-12, with connecting bolts of high strength, low alloy metal in accordance with ANSI/AWWA C111-A21.11. All ferrous metal surfaces shall be shop coated with an epoxy coating for corrosion resistance. Bell restraint clamps shall be Ford Meter Box “Series 1350 Uni-Flange Block Buster”, Romac “Series 611", or approved equal.
   4. Thrust restraints shall be concrete thrust blocks where possible. Where blocks are not possible, Contractor may use bell restraint clamps.

D. Copper Tubing (CU):
   1. Pipe:
      a. Water Service: ASTM B88, Type K, soft annealed temper.
   2. Fittings:
      a. Water Service: Flared, ANSI/ASME B16.26.
      b. Compressed Air: ASTM B88, Type K, drawn temper (exposed piping) and ASTM B88, Type K, annealed temper (buried piping).
   3. Joining Materials:
      a. Brazing Filler Metals: AWS A5.8, BCuP Series.
      b. Compressed Air: Wrought Copper Solder-Joint Fittings: ANSI B16.22, streamlined pattern.

4. Supports (Where exposed piping is anchored to structures):
   a. Copper tubing shall be supported by tube straps with two (2) anchors or thermoplastic pipe clips.

E. Ductile Iron Pipe (DIP):
1. Pipe: Ductile iron, meeting the requirements of ANSI/AWWA C151/A21.51. Pipe shall have a wall thickness conforming to the following:
   a. Flanged pipe and all pipe inside tanks or buildings: Special Thickness Class 53.
   b. Buried pipe: 12-inch and smaller, Pressure Class 350. Larger than 12-inch, Pressure Class 250.
2. Joint Types: Where types of joints in ductile iron piping are indicated on the Drawings, these shall govern. Where not indicated on the Drawings, the following types of joints shall be used: All joints for piping inside wetwells, vaults, exposed locations, and other locations indicated on the Drawings shall be either grooved end or flanged joints. Joints for buried piping shall be restrained mechanical joint for sections of pressure conduits requiring joint restraint, as specified in Section 02535 - Piping Systems Installation. Joints for concrete-encased piping shall be mechanical joint.
3. Joint Requirements:
   a. Grooved End Joints: Shall conform to ANSI/AWWA C606. Couplings shall be cast of ductile iron conforming to ASTM A-536. Bolts shall be steel conforming to ASTM A-183. For couplings located inside liquid containing areas, bolts and nuts shall be stainless steel conforming to ASTM A-193. Gaskets shall be synthetic rubber.
   b. Flanged Joints: Flanges shall be threaded-on, flat faced ductile iron, conforming to ANSI/AWWA C115/A21.15. Bolts shall be steel, ASTM A307. Nuts shall be ASTM A307 steel with ANSI/ASME B.18.2.2 heavy semifinished pattern. Gaskets shall be full faced synthetic rubber, 1/8" thick, conforming to Appendix B of ANSI/AWWA C111/A21.11.
   c. Push-on Joints: Shall conform to ANSI/AWWA C111/A21.11. Push-on joint gaskets shall be neoprene or synthetic rubber.
   d. Mechanical Joints: Shall conform to ANSI/AWWA C111/A21.11. Mechanical joint gaskets shall be neoprene or synthetic rubber.
   e. Restrained Mechanical Joints: Restrained mechanical joints shall utilize a follower gland incorporating individually activated wedges, with a rated working pressure of 350 psi. The restraining gland shall be capable of full mechanical joint deflection during assembly, and flexibility shall be maintained after burial. Torque-limited twist-off nuts shall be used to ensure proper actuation of the restraining wedges. Restraining gland shall be coated with manufacturer's standard asphaltic coating. Restraining glands shall be EBAA Iron "Megalug Series 1100" or equal.
4. Fittings: Grooved end fittings shall conform to ANSI/AWWA C110/A21.10, 350 psi pressure rating. Flanged fittings shall conform to ANSI/AWWA C110/A21.10, 250 psi pressure rating. Mechanical joint fittings shall conform to ANSI/AWWA C110/A21.10, 350 psi pressure rating. Compact fittings conforming to ANSI/AWWA C153/A21.53 may be used in lieu of standard pattern mechanical joint fittings.
5. Taps: When ductile iron pipe is to be tapped, as indicated on the Drawings, a factory welded-on boss shall be provided, unless standard pattern mechanical joint fittings are specifically indicated on the Drawings.
6. Lining: All pipe and fittings shall be provided with cement-mortar lining conforming to ANSI/AWWA C104/A21.4, or a 25 mil polyethylene lining in accordance with ASTM D -1248. Asphaltic lining shall be provided. For 3-inch pipe, cement mortar lining shall be omitted.
7. Asphaltic Coating: Exterior surfaces of all pipe which is to be buried or completely concrete encased, including fittings, shall receive a shop applied one-mil thick asphaltic coating. Asphaltic coating shall conform to AWWA C115, AWWA C110, and AWWA C153, as applicable.

8. Shop primer: Exterior surfaces of all pipe and fittings to be located inside buildings or in exposed locations above grade outdoors, shall be blast cleaned to near-white metal per SSPC-SP10 and shop coated with a high solids alkyd-phenolic primer to a dry film thickness of 3.0 mils. Shop primer shall be Tnemec “Series 37H Chem-Prime H.S.” or equal. Exterior surfaces of all pipe and fittings to be located inside wetwells, tanks or vaults, shall be blast-cleaned to near-white metal per SSPC-SP10, and shop primed with a high solids epoxy, Tnemec "Series 69 Hi-Build Exosoline II" or equal, to a dry film thickness of 3.0 mils.
9. Polyethylene Encasement: All pipe and fittings shall be provided with a minimum of one wrap of polyethylene encasement. Polyethylene tube for polyethylene encasement shall be seamless, ANSI/AWWA C105/A21.5.

F. Steel Casing Pipe
1. Casing pipe shall be installed as indicated on the Drawings to provide for repair, removal, and replacement of the carrier pipe without interference to traffic.
2. Casing pipe and joints shall be made of metal and of leakproof construction. Casings shall be capable of withstanding E-80 loading (including impact).
3. Steel pipe shall have minimum yield strength of 35,000 pounds per square inch.
4. All metallic casing pipes are to be designed for effective corrosion control, long service life and relatively free from routine servicing and maintenance. Corrosion control measures must include cathodic protection.
5. Wall thickness designated for steel casing pipe for E-80 loading shall be as follows`:

Nominal Diameter (inches)	Min. Thickness for Coated (inches)	Min Thickness for Non-Coated (inches)
14 and Under	0.188	0.250
16	0.219	0.281
18	0.250	0.312
20 and 22	0.281	0.344
24	0.312	0.375
26	0.344	0.406
28	0.375	0.438
30	0.406	0.469
32	0.438	0.500
34 and 36	0.469	0.532
38	0.500	0.562
40	0.531	0.594
42	0.562	0.625
44 and 46	0.594	0.657
48	0.625	0.688
50	0.656	0.719
52	0.688	0.750
54	0.719	0.781

56 and 58	0.750	0.812
60	0.781	0.844
62	0.812	0.875
64	0.844	0.906
66 and 68	0.875	0.938
70	0.906	0.969
72	0.938	1.000

6. The inside diameter of the casing pipe shall be such that the carrier pipe can be removed without disturbing the casing. All joints or couplings, supports, insulators or centering devices for the carrier pipe shall be considered in the casing diameter.

2.2 PIPE ACCESSORIES

A. Banded Couplings: Banded couplings for gravity piping shall be synthetic rubber repair couplings with stainless steel clamping ring bands, BANDSEAL by Dickey, Fernco coupling or approved equal. Banded couplings shall be provided to transition between different materials and sizes as required.

B. Pipe grouting rings: Pipe grouting rings shall be synthetic rubber, with stainless steel take-up clamps. Ring and clamps shall meet or exceed the requirements of ASTM C-923. Grouting rings shall be matched to the outside diameter of the carrier pipe. Grouting rings shall be Press-Seal Gasket Corporation “WS Series WaterSTOP Grouting Rings” or approved equal.

C. Mechanical couplings: Mechanical couplings shall be gasketed, sleeve-type, sized to properly fit the pipes to joined, with steel or ductile iron middle ring, steel or ductile iron follower rings, and synthetic rubber gaskets. Gaskets shall be SBR, Buna-N, or EPDM. All ferrous metal surfaces shall be shop coated with an epoxy coating for corrosion resistance. All hardware shall be 300 series stainless steel. Mechanical couplings shall be Ford Meter Box “Style FC1, Style FC2A, Style FC3, or Style FC23”, Dresser “Style 38, Style 153, or Style 162", Smith-Blair “441 or 411”, or equal.

D. Dismantling Couplings: Dismantling couplings shall consist of ANSI flanged spigot which telescopes within a ANSI flanged adaptor to provide at least 1.5" of longitudinal adjustment. Spigot piece shall be ASTM A-283 Grade C steel. Flange adaptor shall be ASTM A-536 Grade 65-45-13 ductile iron. Tie bars shall be tensile steel. Gaskets shall be EPDM suitable for sewage. Tie bars, nuts, and washers shall be zinc coated. Flange adaptor and flange spigot shall be coated with a thermoplastic polymer coating, Rilsan “Nylon 11" to a thickness of 12 mils. Dismantling couplings shall be Viking-Johnson “Dismantling Joints” or approved equal.

E. Flange Adapters: Flange adapters shall be the cast iron slip-on type retained by set screws. Flange body shall be ductile iron, ASTM A-536, Grade 65-45-12. Set screws shall be manufactured form AISI 4140 steel, heat treated to Rockwell C 42-50 and zinc plated. Set screws shall have break away torque heads. Flange adaptors shall conform to ANSI B16.1 for machining and drilling. Gaskets shall be standard mechanical joint gaskets, EPDM or Buna-N. All non-plated ferrous metal parts shall be shop primed with an epoxy primer, for finish painting in the field. Flange adaptors shall be Ford Meter Box Corporation “UNI-Flange Series 200" or equal.

F. Wall Pipes: Wall pipes shall be ductile iron, cast as a single piece or fabricated. Ends shall be plain end, mechanical joint, or flanged as indicated on the Drawings.

G. Wall/Floor Sleeve Assemblies:

1. Wall sleeves: Sleeves shall be either:
   a. HDPE thermoplastic with molded-in waterstop and reinforcing ribs. Nailer caps shall be provided for setting in forms. Thunderline Corp. “Model CS” or equal.
   b. Fabricated from heavy-wall welded or seamless carbon steel pipe, with full circle waterstop continuously welded to sleeve. Sleeve shall fabricated to proper wall thickness, and hot dip galvanized after fabrication. Thunderline “Model WS” or equal.
2. Floor Sleeves: Shall be as specified above for galvanized steel wall sleeves.
3. Modular casing seal: Shall have black EPDM seal elements, composite seal plates, and 18-8 stainless steel bolts and nuts. The sizing and number of seal links shall be accurately sized to accommodate the pipe outside diameter and the sleeve inside diameter. Modular casing seals shall be Thunderline “Link Seal Model S” or equal.
4. In lieu of wall sleeve assemblies specified above, Contractor may also provide Omni-Sleeve wall sleeve assemblies.

H. Flexible Expansion Sleeves: Flexible expansion sleeves shall be synthetic butyl rubber. The body shall consist of fabric and various rubber compounds reinforced with steel rings. The cover shall be suitable for service conditions, formed from natural rubber or synthetics and coated with a Hypalon paint. All materials shall be suitable for temperatures up to 250° F for pressure and vacuum service. Flexible expansion sleeves shall be single arch configuration, Redflex “SL-50" or equal.

I. Arch Expansion Joints: Arch expansion joints shall be Neoprene, Hypalon, or Buna-N, Redflex “Part No. J-1W", or equal. Joint shall allow ¾” elongation. The tube shall be a leakproof lining of natural rubber or synthetic. The body shall consist of fabric and various rubber compounds reinforced with steel rings. The cover shall be suitable for service conditions, suitable for 250°F, formed form natural rubber or synthetics and coated with a Hypalon paint. Flanges shall be made of duck and rubber construction and full-faced with 150# ANSI standard drilling. Standard or tapered reducing arch expansion joints shall be provided indicated on the Drawings.

2.3 GRANULAR EMBEDMENT MATERIAL

A. Granular embedment material shall be as specified in Section 02320 - Earthwork and Trenching.

2.4 BACKFILL MATERIALS

A. Backfill materials shall be as specified in Section 02320 - Earthwork and Trenching.

PART 3 EXECUTION

Not Used.

END OF SECTION

SECTION 02535

PIPING SYSTEMS INSTALLATION

PART 1 GENERAL

1.1 SUMMARY

A. The Contractor shall install all required piping, fittings, embedment materials, and all accessories for complete and functional piping systems as shown on the Drawings and specified herein.

1.2 SECTION INCLUDES

A. Installation of piping, fittings, and accessories.

B. Process piping/waterline acceptance testing.

1.3 RELATED SECTIONS

A. Section 02320 - Earthwork and Trenching: For trenching, embedment, and backfill

B. Section 02530 - Piping System Products: For products installed herein

C. Section 02725 - Water Line Testing and Flushing

D. Section 02726 - Water Line Disinfection

1.4 REFERENCES: The following publications form a part of these specifications to the extent indicated by references thereto. The revision in effect at the time of the Bid Opening shall be applicable. If these publications conflict with the requirements of this section, the requirements of this section shall govern.

A. American Society for Testing and Materials (ASTM):
1. D-2774 - Standard Practice For Underground Installation of Thermoplastic Pressure Piping
2. D-2855 - Making Solvent-Cemented Joints with Poly (Vinyl Chloride) (PVC) Pipe and Fittings

B. American National Standards Institute (ANSI)/American Society of Mechanical Engineers (ASME):
1. B1.20.1

D. American Water Works Association (AWWA):
1. C600 - Installation of Ductile-Iron Water Mains and Their Appurtenances.
2. C605 - Underground Installation of Polyvinyl Chloride (PVC) Pressure Pipe and Fittings for Water.
3. C900 - Polyvinyl Chloride (PVC) Pressure Pipe and Fabricated Fittings, 4 in. Through 12 in., for Water Distribution.
4. C905 - Polyvinyl Chloride (PVC) Pressure Pipe and Fabricated Fittings, 14 in. Through 48 in., for Water Transmission and Distribution.

E. Uni-Bell PVC Pipe Association:
1. Uni-B-13-92 - Uni-Bell PVC Pipe Association “Recommended Performance Specification for Joint Restraint Devices for Use With Polyvinyl Chloride (PVC) Pipe.

F. American National Standards Institute (ANSI):
1. B31.1

1.5 DEFINITIONS

A. Embedment: Fill placed under, beside, and directly over pipe prior to subsequent backfill operations.

1.6 SUBMITTALS

A. Submittals for piping system products are covered under Section 02530 - Piping System Products.

1.7 PROJECT RECORD DOCUMENTS

A. Record location of pipe runs, connections, and invert elevations.

B. Record type of pipe material installed.

C. Identify and describe unexpected variations to subsoil conditions or discovery of uncharted utilities.

1.8 REGULATORY REQUIREMENTS

A. Conform to applicable codes and ordinances for disposal of debris.

B. Contractor shall notify utility companies prior to commencement of construction and coordinate work with utilities as required.

1.9 FIELD MEASUREMENTS

A. Verify that field measurements and elevations are as indicated on the Drawings.

PART 2 PRODUCTS

Not Used.

PART 3 EXECUTION

3.1 EXAMINATION

A. Verify that the pipeline lines and grades are as shown on the Drawings.

3.2 PREPARATION

A. The Contractor shall verify the location and depth of all utilities prior to construction. Prior to commencement of work the Contractor shall notify all those companies which have facilities in the vicinity of the construction.

3.3 PROTECTION

A. Locate, identify, and protect utilities that remain, from damage. The Contractor shall make every reasonable effort to protect all existing utilities from damage. If any utility is damaged through the carelessness or neglectful actions of the Contractor, the utility shall be repaired by its owner at the Contractor's expense.

B. Relocation of an existing utility which is within the public right-of-way shall be performed by the respective utility owner at no cost to the Contractor. Relocation and protection of an existing utility which is within a utility easement shall be the responsibility of the Contractor.

C. Any private facilities damaged or disturbed by the Contractor's work shall be repaired by the Contractor prior to close of the working day. Repairs shall be made in a manner sufficient to restore utility service to that property.

D. Protect trees, plant growth, and features designated to remain as final landscaping.

E. Protect all property or lot corner pins and stakes from damage or displacement. If property or lot corner markers must be moved, they shall be properly referenced prior to removal and reset by the Contractor upon completion of the project.

F. Protect from damage or displacement all project benchmarks and existing structures within or adjacent to the construction limits that are not to be removed or demolished.

3.4 SEPARATION OF WATER AND SEWER UTILITIES

A. Gravity Sanitary Sewers: When potable water pipes (excluding service water pipes downstream of a backflow preventer) and gravity sanitary sewers are laid parallel to each other, the horizontal distance between them shall be not less than 10 ft (3.0 m). The distance shall be measured from edge to edge. The laying of water pipes and sanitary sewers shall be in separate trenches with undisturbed earth between them. In cases where it is not practical to maintain a 10 ft. (3.0 m) separation, Contractor shall notify the Engineer, whom will consult with MDNR to consider equivalent protection by other methods. Equivalent protection may require sanitary sewer construction with one of the following additional protective features: concrete encasement, vacuum sewers, or jointless pipe such as fused HDPE or cured in place pipe liner.

B. Sanitary Sewer Crossings:

1. When a water pipe and a sanitary sewer cross and the sewer is 2 ft (0.6 m) or more (clear space) below the water pipe, no special requirements or limitations are provided herein. At all other crossings, the sanitary sewer is to be constructed of one of the following materials (or approved equal) and pressure tested to assure water tightness pursuant to the most recent version of MDNR's "10CSR20":
   a. Ductile iron pipe conforming to ASTM A536 or ANSI/AWWA C151/A21.51 with minimum thickness class 50, and gasketed, push-on, or mechanical joints In conformance with ANSI/AWWA C111/A21.10 or ANSI/AWWA C111/A21.11.
   b. PVC pipe conforming to ASTM 03034 with minimum wall thickness of SDR41, ASTM F679, or ASTM F794, with gasketed push-on joints in conformance with ASTM D32l2.
   c. Reinforced concrete pipe conforming to ASTM C76 with gasketed joints in conformance with ASTM C361 or ASTM C443.
2. Joints in the sewer pipe shall be located as far as practical from the intersected water main.
3. Where a water main is laid across or through an area where there is an existing sanitary sewer, which is not constructed of one of the above specified materials and is 2 ft. (0.6 m) or less below the water pipe, the existing sewer shall be encased in concrete with a minimum thickness of 6 inches (15.2 cm) for a 10 ft. (3.0 m) distance on each side of the crossing or the crossed section of sewer replaced to meet the above specified construction requirements. The above requirements shall also apply where a water main must cross under an existing sanitary sewer. If the above conditions cannot be met, Contractor shall notify Engineer. Engineer shall consult with MDNR to consider equivalent protection by other means on a case-by-case basis.
4. When a water main and a sanitary sewer must cross, it is preferred that the water main cross over the sanitary sewer, regardless of whether the sanitary sewer is new or existing.
5. Special provisions may be required to ensure adequate structural support for, and to maintain minimum pipe-to-pipe clearances between, a water main and a sanitary sewer at a water main and sanitary sewer crossing.

B. Sewer Connections: There are to be no physical connections between any parts of the potable water system with building sewers, sanitary sewers, or wastewater treatment facilities by means of which it would be possible for sewage, even under exceptional circumstances, to reach the wells, storage reservoirs, or distribution systems.

C. Pressure Sewer Lines: When sewer forcemains run parallel to water lines, the separation distance shall be as far as practical, but at least a 10 ft (3.0 m) horizontal separation shall be maintained. There shall be at least a 2 ft (0.6 m) vertical separation at crossings with the water main crossing the sewer force main with the water main above the forcemain. In cases where it is not practical to maintain the required vertical separation distance between a water line and a sanitary sewer forcemain, the Contractor shall notify the Engineer. Engineer will consult with MDNR to consider encasing the sanitary sewer forcemain in concrete for a distance of 10 feet in each direction or equivalent protection by other methods. The encased pipe shall have a joint within 5 feet of the end of the concrete.

D. Sewer Manholes: No water pipe shall pass through or come in contact with any part of a sewer manhole. Required horizontal separation distances between water mains and manholes are equivalent to those for water mains and gravity sanitary sewers.

E. Storm Sewers: The separation distance between a storm sewer (which is not a combined storm/sanitary sewer) and a water main, if encountered, shall be determined by the Engineer based on geotechnical considerations. Required separation distances between water mains and combined storm/sanitary sewers are equivalent to those for water mains and gravity sanitary sewers.

F. Drains: Underground drains from fire hydrants or valve pits should not be directly connected to sanitary or storm drains.

G. Separation of Watermains and Other Pollution Sources: It is of the utmost importance that potable water lines be protected from any source of pollution. The following shall pertain to instances where septic tanks, absorption fields, waste stabilization ponds, feedlots, or other sources of pollution are encountered.

1. A minimum distance of25 ft. (7.6 m) shall be maintained between all potable water lines and all pollution sources, e.g., septic tanks, septic tank absorption fields, waste stabilization ponds, sewage contamination, wastewater, landfill leachate, and all CAFO facilities.
2. Under no circumstances shall a water line be extended through an area that is a real or potential source of contamination to the water line or water supply.
3. Under no conditions shall the encasement of a water line be considered as adequate protection of a water line or a water supply for the purpose of extending the water line through a real or potential source of contamination.

3.5 PIPE EMBEDMENT/ENCASEMENT

A. Material and installation for pipe embedment and concrete encasement shall be provided as indicated on the Drawings and specified in Section 02320 - Earthwork and Trenching.

3.6 PIPE INSTALLATION

A. All pipe shall be protected during transport, storage and installation from shock and free fall. Pipes shall be installed without cracking, chipping, breaking, bending or damaging the materials. Damaged pipe shall be replaced with new materials except when repairs are permitted by the Engineer. Use slings, lifting lugs, hooks and other protection devices during handling.

B. Install pipe of the size, material, strength class, and joint type as specified or indicated on the Drawings. Every pipe fitting is not called out on the Drawings. Contractor shall provide fittings required to connect piping as shown on piping plans, and plan and profile Drawings. Additional

fittings required to make vertical changes in elevation to avoid utilities or to meet connections shall be provided at no additional cost to Owner.

C. The maximum fitting bend for force mains and pressurized process piping shall be 45 degrees. When multiple fittings are assembled adjacent to make deflections in alignment, adequate piping shall be provided between for thrust restraint.

D. Where cutting of pipe is allowed, pipe shall be cut from measurements taken at the site and not from the Drawings.

E. Install gravity pipelines beginning with the lowest point of the pipeline and install pipe with the spigot or tongue end downstream. Install pressure pipelines with the bell ends facing the direction of laying, except when reverse laying is specifically authorized by the Engineer.

F. Install pipe to the line and grades indicated on the drawings. Unless otherwise noted on the Drawings, minimum cover over top of pipe shall be 42 inches. Maximum slope variation from true slope shall be one inch between structures for gravity sewers. The maximum variation from alignment between structures shall be two inches. Joint deflection shall not exceed the maximum allowable deflection per joint according to the governing standard. The pipe manufacturer's maximum recommended deflection limits, if more stringent, shall govern over the referenced standards.
   1. Only one correction for alignment and/or grade shall be made between structures.
   2. The Contractor shall establish such grade control devices necessary to maintain the specified tolerance. All pipe shall have a continuous slope free of depressions.

G. Pipe installation shall be in accordance with applicable standards, such as ASTM C-12, D-2321, ANSI/AWWA C600, and AWWA C605, except where conflicts with this section occur, in which case this section shall govern.

H. Clean the interior of all pipe fittings and joints prior to installation. Protect pipe against the entrance of debris and foreign matter during discontinuance of installation and at the close of the working day by installing a close fitting plug at the open end. Plugs shall be water tight against heads up to 20 feet of water.

I. The Contractor shall take whatever means necessary to keep the trenches free of water and as dry as possible during pipe installation, bedding and jointing operations.

J. After each pipe has been brought to grade, aligned and placed in final position, place sufficient embedment material under the haunches and on each side of the pipe to hold the pipe in proper position during subsequent pipe jointing, bedding and backfilling operations. Place embedment material uniformly and simultaneously on each side of the pipe to prevent lateral displacement. Embedment material shall be compacted as specified in Section 02320 - Earthwork and Trenching.

K. Pipe Jointing: Locate joints to provide for differential movement at changes in type of embedment, concrete collars and encasement and structures. Pipe jointing shall be according to the following specifications:
   1. Clean and lubricate all joint and gasket surfaces as recommended by the manufacturer.
   2. Examine all materials prior to installation for soundness and compliance with specifications.
   3. Check joint position and condition after assembly prior to installing additional pipe sections.
   4. Check joint opening and deflection for specification limits.

L. Pipe cutting shall be performed in a neat and workmanlike manner without damage to the pipe. Main taps for service saddle tees shall be made with a tapping tool specifically designed for that purpose. Cut edges shall be smoothed by power grinding to remove burrs and shape edges.

M. Pipe connection to structures: Pipe connection to new structures shall be as shown on the Drawings.

3.7 REQUIREMENTS FOR PIPE JOINTS: Pipe joints shall be carefully and neatly made, in accordance with the requirements which follow.

A. Threaded: Pipe threads shall conform to ANSI/ASME B1.20.1, NPT, and shall be full and cleanly cut with sharp dies. Not more than three threads at each pipe connection shall remain exposed after installation. Ends of pipe shall be reamed, after threading and before assembly, to remove all burrs.

1. Threaded joints, in plastic piping, shall be made up with Teflon thread tape applied to all male threads. Threaded joints, in stainless steel piping, shall be made up with Teflon thread tape applied to all male threads. At the option of the Contractor, threaded joints in other piping may be made up with Teflon thread tape, thread sealer or a suitable joint compound.

B. Flared: Ends of annealed copper tubing shall be cut square, and all burrs shall be removed prior to flaring. Ends shall be uniformly flared without scratches or grooves. Fittings shall be tightened as required, to produce leak-tight connections.

C. Solvent Welded: All joint preparation, cutting and jointing operations shall comply with the pipe manufacturer's recommendations and ASTM D-2855. Pipe ends shall be beveled or chamfered to the dimensions recommended by the manufacturer. Pressure testing, of solvent welded piping systems, shall not be performed until the applicable curing time, set forth in Table X2.1 of ASTM D-2855, has elapsed.

D. Flanged: Flange bolts shall be tightened sufficiently to slightly compress the gasket and effect a seal, but not so tight as to fracture or distort the flanges. A plain washer shall be installed under the head and nut of bolts connecting plastic pipe flanges. Anti-seize thread lubricant shall be applied to the threaded portion of all stainless steel bolts during assembly. Connecting flanges shall have similar facings, i.e., flat or raised face.

E. Welded: Welding shall conform to the specifications and recommendations contained in the "Code for Pressure Piping", ANSI B31.1. The following requirements shall also apply for stainless steel piping:

1. High purity inert welding gases and cover gases shall be used. Weld surfaces shall be sliver, light gold or straw color at worst, after welding. Black welds are not acceptable.
2. Prior to welding, all surfaces shall be clean and free of all organic materials, moisture and dirt.
3. Welds shall be dressed using aluminum oxide grinding wheels. Silicon carbide is not acceptable.

F. Push-on: Gasket installation and other jointing operations shall be in accordance with the recommendations on the manufacturer. Each spigot end shall be suitable beveled to facilitate assembly. All joint surfaces shall be lubricated with a heavy vegetable soap solution immediately before the joint is completed. Lubricant shall be suitable for use in potable water, shall be stored in closed containers, and shall be kept clean.

G. Rubber Gasketed: When rubber-gasketed joints are used for hub and spigot type cast iron soil pipe, spigot ends shall be plain, without beads. Cut ends of all pipe shall be cut square and all burrs removed. Spigot ends shall be coated with a lubricant recommended by the gasket manufacturer and fully seated in the gasket. Clamps for hubless cast-iron soil pipe shall be installed in accordance with the manufacturer's recommendations.

3.8 DUCTILE IRON PIPING

A. General: Ductile iron pipe shall be installed according to AWWA C600.

B. Handling: Pipe and fittings shall be handled and installed carefully to prevent damage to pipe material, linings, and coatings. Hooks placed in ends of pipe or fittings shall have well-padded surfaces. All coatings which are damaged shall be repaired by the Contractor prior to installation, to the satisfaction of the Engineer.

C. Cutting: Pipe shall be shop fabricated to the approximate lengths required. Pipe shall not be cut in the field, except where flange adapters or mechanical couplings are indicated on the Drawings or where allowed by Engineer. Pipe may be cut with a portable saw, abrasive wheel, or oxyacetylene torch. The use of hydraulic squeeze type cutters will not be permitted. Cuts shall be smooth, straight, and at right angles to the pipe axis. Cut edges shall be dressed with a file or power grinder to remove all roughness and sharp edges.

D. Flanged Joints: Flange faces shall be machine faced with pipe end, flat and perpendicular to the pipe axis. When bolting flanged joints, care shall be taken to avoid restraint on the opposite end of the pipe or fitting, which would cause unnecessary stress in the flanges. Bolts shall be tightened gradually and uniformly, to ensure uniform compression of the gasket.

E. Mechanical Joints: Mechanical joints shall be assembled according to the manufacturer's recommendations. If the joint does not form an effective seal, the joint shall be completely disassembled, thoroughly cleaned, and reassembled. Bolts shall be uniformly tightened to the torque values listed in Appendix A of ANSI/AWWA C111/A21.11. Mechanical joints shall be restrained where specified herein.

F. Grooved End Joints: Grooved end joints shall be assembled according to the manufacturer's recommendations. If the joint does not form an effective seal, the joint shall be completely disassembled, thoroughly cleaned, and reassembled. Bolts shall be uniformly tightened to the torque values listed in the manufacturer's installation instructions, to ensure uniform compression of the gasket.

G. All buried ductile iron pipe shall be provided with polyethylene tube protection installed in accordance with AWWA C105, Method A.

3.9 CASING PIPE INSTALLATION

A. Casing and pipeline installations should be accomplished by directional boring, jack-and-bore, tunneling or other approved methods. Tunneling construction under railroad tracks will be permitted only under direct supervision of the owner of the railroad. Generally, tunneling shall not be considered where less than six (6) feet of cover exists, or where excessively sandy, loose or rocky soils are anticipated.

1. For cased crossings of railroads:
   a. Tunneling procedures and equipment, as well as structural design, must have the railroad owner's approval prior to starting any work on railroad property.
   b. Rail elevations over the work must be monitored at intervals prescribed by the railroad to detect any track movement. Movements of over one-quarter (1/4) inch vertically shall be immediately reported to the Railroad's designated representative. Due to the danger to rail traffic that is caused by only small amounts of track movements, the Railroad may have to be called to surface the track several times.
2. The following requirements shall apply to the above construction methods:
   a. The use of water under pressure jetting or puddling will not be permitted to facilitate boring, pushing or jacking operations. Some boring may require water to lubricate cutter and pipe, under such conditions, is considered dry boring.

b. Where unstable soil conditions exist, boring or tunneling operations shall be conducted in such a manner as not to be detrimental to the roadway or railroad being crossed.

c. If excessive voids or too large a bored hole is produced during casing or pipeline installations, or if it is necessary to abandon a bored or tunneled hole, prompt remedial action should be taken by the Contractor.

d. All voids or abandoned holes caused by boring or jacking are to be filled by pressure grouting. The grout material should be sand cement slurry with a minimum of two (2) sacks of cement per cubic yard and a minimum of water to assure satisfactory placement.

e. The hole diameter resulting from bored or tunneled installations shall not exceed the outside diameter of the utility pipe, cable casing (including coating) by more than one and one-half (1-1/2) inches for pipes with an inside diameter of twelve (12) inches or less, or two (2) inches on pipes with an inside diameter greater than twelve (12) inches.

B. Vents. In casing pipe installations, vents are appurtenances by which fluids or gases between carrier and casing may be inspected, sampled, exhausted or evacuated.

1. Vents shall be located at the high end of short casings and at both ends of casing longer than one hundred fifty (150) feet.
2. Vent standpipes shall be located and constructed so as not to interfere with maintenance of the roadway or railroad, or to be concealed by vegetation. Where possible, they shall be marked and located at the property line. The markers shall give the name and address of the owner, and a phone number to contact in case of emergency.
3. Casing pipe, when sealed, shall be properly vented. Vent pipes shall be of sufficient diameter, but in no case less than two (2) inches in diameter and shall be attached near each end of casing, projecting through ground surface at property lines.
4. Vent pipes shall extend not less than four (4) feet above ground surface. Top of vent pipes shall be fitted with a down-turned elbow, properly screened; or a relief valve.
5. For pipelines carrying flammable materials, vent pipes on casings shall be at least 16 feet (vertically) from aerial electric wires. Casings shall be suitably insulated from underground conduits carrying electric wires on roadway or railroad right-of-way.

3.10 PIPE ACCESSORIES

A. Mechanical couplings: Mechanical couplings shall be carefully installed in accordance with the manufacturer's recommendations. Pipe ends shall be separated by a space of at least 1/4 inch but not more than 1 inch. Pipe and coupling surfaces which contact gaskets shall be clean and free from dirt during assembly. Following installation of the coupling, damaged areas of shop coatings on the pipe and couplings shall be repaired.

B. Wall Pipes: Where wall pipes with flanged or mechanical joint ends are installed, the bolt holes in the bell of the wall pipe shall straddle the top centerline of the casting. The top centerline shall be marked on the wall pipe at the foundry.

3.11 JOINT RESTRAINT FOR PRESSURE PIPING: Joint restraint shall be provided for portions of buried piping which will serve in a pressure flow application, including: water lines and pump discharge lines.

A. Joint restraint for all pressure pipe shall be accomplished by means of thrust blocks, as shown and detailed on the Drawings.

1. All plugs, caps, tees, bends and hydrants shall be provided with thrust blocks according to the details in the plans, and using 3,000 psi concrete.
2. The concrete shall extend from the fitting or hydrant to undisturbed soil and poured or formed so that joints are accessible. If adequate soil support cannot be obtained, a mechanical restraining assembly shall be installed.

B. Where specifically indicated on the Drawings, concrete thrust blocks shall be provided in place of mechanical restraint.

C. Joint restraint for pressure pipe shall be accomplished using bell restraint clamps for joints between pipes, and fitting restraint devices at joints with fittings, as specified herein. Joints shall be restrained for a minimum distance as recommended by the manufacturer of the joint restraint device being used and for the conditions in which the pipe is installed.

3.12 PRESSURE PIPING ACCEPTANCE TESTING

A. Refer to Section 02725 - Water Line Testing and Flushing.

3.13 GRAVITY PIPING ACCEPTANCE TESTING

A. All new segments of sewer or other gravity piping between manholes or structures will be subject to acceptance testing under this subpart. Segments of piping which are shorter than 100 feet will not be subject to testing.

B. Visual Inspection:
1. Clean pipe of excess mortar, joint sealant, dirt and debris prior to inspection.
2. Inspect the sewer by lamping the pipeline between manholes to determine the location of any misaligned, displaced or broken pipe and any visible infiltration or defects. In large pipes where space permits, the visual inspection may be made by physical passage.
3. Correct defects as required prior to conducting leakage tests.

C. Air Leakage Test:
1. Contractor shall perform air leakage tests for all pipe sizes.
2. Notification: Contractor shall notify Engineer at least 48 hours in advance the scheduled time for testing. Resident Project Representative shall be present for acceptance testing and approval.
3. Contractor shall provide all necessary equipment for performance of the air leakage test, including but not limited to piping connections, pipe plugs with taps, test pumping equipment, pressure gauges, bulkheads and regulators to avoid over pressurization. The equipment and gauges shall meet the minimum specifications set forth in ASTM F-1417. The air equipment shall consist of necessary valves and pressure gauges to control an oil-free air source and the rate at which air flows into the test section to enable monitoring of the air pressure within the test section.
4. Gauge certification from the manufacturer and calibration data shall be required for all pressure test gauges, a copy of which will be made available to the Engineer at the time the air tests are performed.
5. Test each reach of pipe between manholes after completion of pipe and appurtenance installation and trench backfill.
6. Plug ends of sewer line at manholes and cap or plug all lateral connections to withstand internal pressure. One plug shall have two taps for connecting equipment. After connecting air control equipment to the air hose, begin increasing the air supply within the pipe section, monitoring the air pressure so that the internal pressure does not exceed 6.0 psig.
7. After the internal pressure reaches 4.0 psig, throttle the air supply to maintain between 4.0 and 3.5 psig for at least two minutes in order to reach equilibrium between air temperature and pipe walls. During this time, check all plugs for leaks. If leaks are found, bleed off air, tighten plugs and begin increasing the air supply again.
8. Air testing shall take place by the Time-Pressure Drop Method. Decrease the pressure to 3.5 psig and begin timing to determine the time required to achieve a pressure drop from 3.5 to 2.5 psig. If the time, in seconds, to achieve the 1.0 psig pressure drop is greater than that shown in the following table, the line is presumed free of defects. For pipe sizes and lengths other than those shown in the table below, refer to ASTM F-1417.

Required Time for Length up to Length Indicated, min:sec							
Pipe Size	up to 100 ft.	200 ft.	250 ft.	300 ft.	350 ft.	400 ft.	450 ft.
8"	7:34	7:34	7:34	7:36	8:52	10:08	11:24
10"	9:26	9:26	9:53	11:52	13:51	15:49	17:48
12"	11:20	11:24	14:15	17:05	19:56	22:47	25:38
15"	14:10	17:48	22:15	26:42	31:09	35:36	40:04
18"	17:00	25:38	32:03	38:37	44:52	51:16	57:41
21"	19:50	34:54	43:37	52:21	61:00	69:48	78:31
24"	22:47	45:34	56:38	68:22	79:46	91:10	102:23
27"	28:51	57:41	72:07	86:32	100:57	115:22	129:48

9. If the air test fails to meet the requirements, repair the defects and retest the line. All constructed sewer lines shall pass the low pressure air test prior to acceptance.
10. In areas where ground water is known to exist, a ½-inch diameter, 10 inch long, capped pipe nipple shall be installed at the top of the pipe through the manhole wall during installation. Immediately prior to performing the acceptance test, the ground water level shall be determined by connecting a clear plastic tube into the nipple and holding vertically until the water level stops rising. The height in feet shall be divided by 2.3 to establish the pounds of pressure that will be added to the test readings.

D. Deflection Test for Flexible Sewer Pipe:
1. Prior to final acceptance, the Contractor shall perform a diametral deflection test on all flexible and semi-flexible pipe (such as PVC plastic pipe). Tests shall be conducted between manholes or structures. Deflection testing of a segment of sewer shall occur at least 30 days after the pipe has been installed and completely backfilled.
2. The maximum allowable deflection shall be five percent of the inside pipe diameter. A mandrel with a diameter equal to 95 percent of the inside diameter of the pipe to be tested shall be used. Any section of sewer failing the diametral deflection test shall be repaired or replaced by the Contractor at no cost to the Owner, and retested.

3.14 CASING PIPE INSTALLATION

A. Casing and pipeline installations should be accomplished by directional boring, jack-and-bore, tunneling or other approved methods. Tunneling construction under railroad tracks will be permitted only under direct supervision of the owner of the railroad. Generally, tunneling shall not be considered where less than six (6) feet of cover exists, or where excessively sandy, loose or rocky soils are anticipated.
1. For cased crossings of railroads:
   a. Tunneling procedures and equipment, as well as structural design, must have the railroad owner's approval prior to starting any work on railroad property.
   b. Rail elevations over the work must be monitored at intervals prescribed by the railroad to detect any track movement. Movements of over one-quarter (1/4) inch vertically shall be immediately reported to the Railroad's designated representative. Due to the danger to rail traffic that is caused by only small amounts of track movements, the Railroad may have to be called to surface the track several times.

2. The following requirements shall apply to the above construction methods:
   a. The use of water under pressure jetting or puddling will not be permitted to facilitate boring, pushing or jacking operations. Some boring may require water to lubricate cutter and pipe, under such conditions, is considered dry boring.
   b. Where unstable soil conditions exist, boring or tunneling operations shall be conducted in such a manner as not to be detrimental to the roadway or railroad being crossed.
   c. If excessive voids or too large a bored hole is produced during casing or pipeline installations, or if it is necessary to abandon a bored or tunneled hole, prompt remedial action should be taken by the Contractor.
   d. All voids or abandoned holes caused by boring or jacking are to be filled by pressure grouting. The grout material should be sand cement slurry with a minimum of two (2) sacks of cement per cubic yard and a minimum of water to assure satisfactory placement.
   e. The hole diameter resulting from bored or tunneled installations shall not exceed the outside diameter of the utility pipe, cable casing (including coating) by more than one and one-half (1-1/2) inches for pipes with an inside diameter of twelve (12) inches or less, or two (2) inches on pipes with an inside diameter greater than twelve (12) inches.

B. Vents. In casing pipe installations, vents are appurtenances by which fluids or gases between carrier and casing may be inspected, sampled, exhausted or evacuated.
   1. Vents shall be located at the high end of short casings and at both ends of casing longer than one hundred fifty (150) feet.
   2. Vent standpipes shall be located and constructed so as not to interfere with maintenance of the roadway or railroad, or to be concealed by vegetation. Where possible, they shall be marked and located at the property line. The markers shall give the name and address of the owner, and a phone number to contact in case of emergency.
   3. Casing pipe, when sealed, shall be properly vented. Vent pipes shall be of sufficient diameter, but in no case less than two (2) inches in diameter and shall be attached near each end of casing, projecting through ground surface at property lines.
   4. Vent pipes shall extend not less than four (4) feet above ground surface. Top of vent pipes shall be fitted with a down-turned elbow, properly screened; or a relief valve.
   5. For pipelines carrying flammable materials, vent pipes on casings shall be at least 16 feet (vertically) from aerial electric wires. Casings shall be suitably insulated from underground conduits carrying electric wires on roadway or railroad right-of-way.

3.15 FIELD QUALITY CONTROL

A. Perform field inspection and testing.

B. Compaction and soil testing will be performed in accordance with Section 02320 - Earthwork and Trenching.

END OF SECTION

SECTION 02605

PRECAST MANHOLES AND VAULTS

PART 1 GENERAL

1.1 The Contractor shall furnish and install all manholes, covers, and accessories, and perform all repairs to existing manholes, as shown on the Drawings and specified herein, and tested by Contractor for approval by the Engineer.

1.2 SECTION INCLUDES

A. New sanitary sewer manholes and appurtenances

B. Manhole wall reconstruction.

C. Pipe connections to manholes.

D. Manhole Testing.

E. New Valve Vaults.

1.3 RELATED SECTIONS

A. Section 02320 - Earthwork and Trenching

B. Section 02530 - Piping System Products

C. Division 3 - Concrete

1.4 REFERENCES: The following publications form a part of these specifications to the extent indicated by references thereto. The revision in effect at the time of the Bid Opening shall be applicable. If these publications conflict with the requirements of this section, the requirements of this section shall govern.

A. Midwest Concrete Industry Board (MCIB) Standard Specification for Concrete Work.

B. American Society for Testing Materials (ASTM):
1. A-48 - Gray Iron Castings
2. A-615 - Deformed and Plain Billet-Steel Bars for Concrete Reinforcement
3. C-32 - Sewer and Manhole Brick (Made From Clay or Shale)
4. C-139 - Concrete Masonry Units for Construction of Catch Basins and Manholes
5. C-270 - Mortar for Unit Masonry
6. C-478 - Precast Reinforced Concrete Manhole Sections, except for the modifications herein.
7. C-923 - Specification for Resilient Connectors between Reinforced Concrete Manhole Structures and Pipes
8. C-1244 - Standard Test Method for Concrete Sewer Manholes by the Negative Air Pressure Test

1.5 SUBMITTALS: The Contractor shall submit the following items required by this division in accordance with Division 1.

A. Product Data for Review:
1. Manholes, castings, manhole appurtenances.
2. Manhole repair products

3. Repair mortar

B. Manufacturer's Installation Instructions: Indicate special procedures required to install products specified.

C. Manufacturer's Certificate: Certify that products meet or exceed specified requirements.

1.6 FIELD MEASUREMENTS

A. Verify that field measurements and elevations are as indicated on the Drawings.

PART 2 PRODUCTS

2.1 AGGREGATE AND BACKFILL MATERIALS

A. Crushed rock: Crushed rock material used as a foundation and for leveling of manholes, shall be as specified in Section 02320 - Earthwork and Trenching. Granular pipe embedment material may also be used.

B. Backfill materials shall be as specified in Section 02320 - Earthwork and Trenching.

2.2 MANHOLE AND VAULT MATERIALS: Manhole materials shall conform to the details on the Drawings, and to the following:

A. Precast manholes and vaults: New manholes and vaults shall be constructed of precast concrete with developed base (DB) or precast concrete with cast-in-place (CIP) base.

1. Precast concrete manholes with CIP base: The precast concrete manholes shall conform to ASTM C-478. All precast concrete shall be 4,000 psi with ASTM C-150, Type II cement. Concrete poured on site shall be 4,000 psi, as specified in Section 03300 - Cast-in-Place Concrete. Joints between the riser sections shall be a double gasketed joint of joint sealant material. Where possible, pipe openings for pipe connections shall be furnished with cast-in-place flexible entrance seals. Otherwise, pipe connections for pipes grouted in place shall be made using pipe grouting rings. Boxouts for grouting shall have surfaces grooved or roughened to improve grout bond.
2. Precast concrete manholes with developed base: The precast concrete manhole shall conform to ASTM C-478. All concrete shall be 4,000 psi with ASTM C-150, Type II cement. The developed base shall be cast monolithic with the bottom riser section. The base reinforcement shall be continuous with the reinforcement of the bottom riser section. Manhole supplier shall verify that barrel reinforcement is sufficient for the depth of installation. Joints between the riser sections shall be a double gasketed joint of joint sealant material. Pipe openings shall be furnished with cast-in-place flexible entrance seals.
3. The minimum shell thickness for precast reinforced manholes shall be:
   a. At a depth of 0 to 16 feet: One-twelfth internal shell diameter or 4 inches, whichever is greater.
   b. At a depth of 16 feet or greater: One-twelfth internal shell diameter plus one inch, or 5 inches, whichever is greater.

B. Adjusting rings: Adjusting rings shall be precast concrete, with circumferential reinforcement per ASTM C-478. The use of two or three grade adjustment rings under the manhole frame and cover is recommended in undeveloped areas where grade adjustment may be necessary.

C. Lifting notches: Precast sections may be provided with lifting notches on the inside faces of walls to facilitate handling. Lifting notches shall be not more than 3 inches deep. Holes extending through a wall will not be acceptable.

D. Castings: Manhole rings and lids shall be constructed of gray cast iron conforming to ASTM A-48. Castings for standard manholes shall be Clay and Bailey Model No. 2008 or approved equal with "Sewer" cast on the lid. Castings for shallow manholes shall be Clay and Bailey Model No. 2002 or approved equal with “Sewer” cast on lid. Castings for “bolt-down lid” manholes and lids, as indicated on the Drawings, shall be Clay and Bailey Model No. 2014LT or approved equal.

E. Protective coating: The protective coating for the exterior of manholes shall be Koppers Company, Inc. Bitumastic No. 50 or Tnemec Company, Inc. “Series 46-465 H.B. Tnemecol” or approved equal. Pre-cast manholes shall be shop coated.

F. Joint sealant: Joint sealant material used for sealing the joint between the manhole frame and chimney or corbel/cone section shall be preformed butyl rubber mastic joint sealant, BIDCO C-56 or equal.

G. Clay brick (for repairs to existing manholes): Clay or shale brick shall conform to the requirements for ASTM C-32, Grade MS or SM. Brick may be either solid or cored.

H. Mortar/Grout: Mortar/grout for brick work and other uses as required shall be a general construction grade grout prepared to a stiff, trowelable consistency. Grout product shall be a non-shrink, non-catalyzed grout containing mineral aggregate, and having a minimum compressive strength of 8,500 psi at 28 days in a plastic consistency. Grout shall be Master Builders “Construction Grout”, W.R. Meadows “Sealtight CG-86", or equal.

1. Preparation of grout mortar: Grout shall be prepared according to the recommended proportions of the manufacturer. Grout mortar may be extended with clean aggregate as recommended by the manufacturer. Grout mortar shall be mixed only in such quantities as needed for immediate use. The retempering of grout mortar will not be permitted.

I. Repair Mortar: Repair mortar shall be a one-component, shrinkage-compensated, cement based product. Repair mortar shall have a low permeability and be freeze/thaw durable and resistant to chlorides and sulfates. Repair mortar shall be a single-component product requiring only the addition of potable water for mixing. Repair mortar shall have a minimum compressive strength of 3,800 psi at 1 day and 11,000 psi at 28 days.

1. For hand application: Master Builders “Emaco S88-CI” or approved equal.
2. Pourable or pumpable: Master Builders “Emaco S77-CR” or approved equal.

2.3 MANHOLE AND VAULT ACCESSORIES

A. Pipe grouting rings: Pipe grouting rings shall be synthetic rubber, with stainless steel take-up clamps. Ring and clamps shall meet or exceed the requirements of ASTM C-923. Grouting rings shall be matched to the outside diameter of the carrier pipe. Grouting rings shall be Press-Seal Gasket Corporation “WS Series WaterSTOP Grouting Rings” or approved equal.

B. Flexible entrance seals: Cast-in-place flexible entrance seals shall be “A-LOK” flexible seals manufactured by A LOK Products Incorporated or “Press Wedge II” manufactured by Press-Seal Gasket Corporation or approved equal.

PART 3 EXECUTION

3.1 SEPARATION OF WATER AND SEWER UTILITIES

A. SEWER MANHOLES: No water pipe shall pass through or come in contact with any part of a sewer manhole.

3.2 NEW MANHOLES: New manholes shall be constructed of precast concrete sections, with cast iron frames and covers in accordance with the Drawings and as specified herein.

A. Handling: Precast concrete sections shall be handled carefully and shall be protected during transport, storage and installation from shock and free fall. Hooks shall not be permitted to come into contact with joint surfaces. Per ASTM C-478, damaged sections adversely affecting the watertightness of the sections shall be replaced with new sections, except when repairs are permitted by the Engineer.

B. Inspection: Precast concrete sections shall be inspected when delivered and all cracked or otherwise visibly defective units rejected.

C. Manhole construction:
   1. Precast concrete manholes with cast-in-place base: Construct manhole with precast concrete section on a cast-in-place concrete foundation slab as shown on the Drawings. Concrete base shall be poured over a base of crushed stone. Joint seals between each riser section shall be installed in strict conformance with manufacturer's recommendations. Damaged exterior coating shall be touched up and allowed to dry prior to backfilling.
   2. Precast concrete manholes with a developed base: Precast manholes with a developed base shall be placed on a base of crushed stone as detailed on the Drawings. The crushed stone base shall be graded smooth, level and to the correct grade. The bottom riser section shall be placed upon the crushed stone base and checked for alignment, elevation and plumbness. If not correct, the bottom riser section shall be completely removed from the excavation and the crushed stone base reshaped. Pipe connections to the manholes shall be in strict conformance with manufacturer's instructions for installation of the flexible entrance seals. Joint seals between each riser section shall be installed in strict conformance to manufacturer's recommendations. Damage to exterior coating shall be touched up in the field prior to backfilling.

D. Inverts: The invert channels shall be smooth and semicircular in shape conforming to the inside of the adjacent sewer section.
   1. Changes in direction of flow shall be made with a smooth curve of as large a radius as the size of the manhole will permit. Changes in size and grade of the channels shall be made gradually and evenly.
   2. The floor of the manhole outside the channels (the bench) shall be smooth and shall slope toward the channels not less than 1 inch per foot nor more than 2 inches per foot.
   3. Invert channels shall be formed in the field using either concrete readi-mix, or clay brick and mortar as specified herein. Where brick and mortar used, mortar shall be placed completely around each brick to a minimum thickness of 3/8 inch. Manhole inverts formed directly in the concrete of the manhole base of developed-base manholes will not be acceptable.

E. Flexible entrance seals: Where cast-in-place flexible entrance seals are used to seal pipe connections to new manholes, the concrete or mortar of the field-installed invert shall extend exactly half-way up the pipe, to the springline. No concrete or mortar shall be placed around the pipe on the exterior of the manhole.

F. Frames and covers: Unless shown otherwise on the Drawings, all castings shall be set flush with finish grade in all roadways and lawns, and at least 12 inches above finish grade in all other areas.

3.3 MANHOLE WALL RECONSTRUCTION

A. Where damaged by the Contractor's operations, required by other sections, or indicated on the Drawings, the walls of existing manholes shall be rebuilt using clay brick and mortar. If repair of the manhole wall is adjacent to the sewer pipe wall penetration, repair mortar shall be used in place of mortar.

B. Where joining new work or repair work to existing surfaces, the existing surfaces shall be solid, clean, and sufficiently rough to create a good bond. If surfaces of existing materials are not solid or are prone to crumbling, Contractor shall remove existing materials as required to reach a clean, hard surface.

C. Brick units shall be laid in such as manner that the courses are true to line and the joints fully bonded.
   1. In a structure of circular cross section, the bricks shall be laid with the long dimension radially in the structure.
   2. In a structure of rectangular design, the bricks shall be laid in alternate courses of headers and stretchers.

D. Exterior faces of masonry shall be plastered at least 1/2" thick with mortar.

3.4 PIPE CONNECTIONS TO MANHOLES

A. Pipe connection to new manholes shall be as shown on the Drawings.

B. Pipe connection to new manholes shall be made with cast-in-place flexible entrance seals wherever possible, following the entrance seal manufacturer's instructions.

C. Pipe connection to existing manholes, and to new manholes where boxouts are used shall be made with approximately two inches clearance surrounding the pipe or fitting. A pipe grouting ring shall be placed around the outside of the pipe where the pipe enters the manhole. The opening between the pipe and structure shall be filled with repair mortar to form a water tight seal.

D. Pipe connections to existing manholes shall be made in such manner that the finish work will conform to the essential applicable requirements specified for new manholes, including all necessary concrete work, cutting and shaping. When new sewer piping is connected to an existing manhole, manhole benches and invert shall be repaired using repair mortar.

E. Repair Mortar: Repair mortar used to fill voids around pipes or to repair walls and benches of manholes shall be mixed, applied, and cured according to the manufacturer’s recommendations.
   1. Preparation: Surfaces to receive repair mortar shall be solid and free of oil and grease. The concrete surfaces to receive repair mortar shall be saturated or in a saturated, surface-dry condition as recommended by the manufacturer. The mix may be extended with pea gravel or other suitable aggregate, as limited by the manufacturer’s recommendations.
   2. Mixing shall be accomplished with a slow speed drill equipped with a paddle or an appropriate size mortar mixer.
   3. Placement: Repair mortar used to fill voids and holes shall be hand-placed in plastic form or poured in flyable form, as required by the manufacturer’s recommendations for the product used.
   4. Application of repair mortar in vertical and horizontal layers shall conform to the thickness limitations of the manufacturer.
   5. Curing: Repair mortar shall be protected against rapid loss of moisture by covering with wet rags or polyethylene sheets. The repair mortar shall be wet cured for at least 7 days. As an alternative to moisture curing, a two-coat application of a curing compound recommended by the manufacturer may be used.

3.5 MANHOLE TESTING

A. Manhole leakage test: All new precast manholes and existing manholes which have been rehabilitated shall pass a vacuum leakage test. Contractor shall conduct vacuum tests.

B. Notification: Contractor shall notify Engineer at least 48 hours in advance the scheduled time for testing. Resident Project Representative shall be present for acceptance testing and approval.

C. Pre-Test Inspection: All precast concrete manholes shall be visually inspected to determine the presence of misaligned, displaced, broken manhole sections or other physical defects. All defects shall be satisfactorily corrected prior to conducting vacuum leakage tests.

D. Each manhole shall be tested immediately after assembly and prior to backfilling. All lifting holes shall be plugged with repair mortar. No standing water shall be allowed in the excavation during testing.

E. Vacuum testing procedure: All pipes entering the manhole shall be plugged, taking care to securely brace the plugs from being drawn into the manhole. The test head shall be placed at the inside of the top of the cone section and the seal inflated in accordance with the manufacturer's recommendation. A vacuum of 10 inches of mercury shall be drawn and the vacuum pump shut off. With the valves closed, the time shall be measured for the vacuum to drop to nine inches. The manhole shall pass if the time is greater than 60 seconds for a 48-inch diameter manhole, 75 seconds for 60 inches, and 90 seconds for 72 inches. If the manhole fails the initial test, necessary repairs shall be made by replacing the joint seals and/or pipe seals. Retesting shall proceed until a satisfactory test is obtained. If the joint mastic or gasket is displaced during the vacuum testing, the manhole shall be disassembled, the seal replaced and the manhole retested. Manholes which cannot be made to pass in this manner shall be replaced.

3.6 FIELD QUALITY CONTROL

A. Field inspection and testing will be performed under provisions of Section 01400 - Quality Control.

END OF SECTION

SECTION 02725

WATER LINE TESTING AND FLUSHING

PART 1 GENERAL

1.1 This section applies to all work associated with pressure testing and flushing of newly installed water lines throughout the distribution system. The work shall consist of all labor and equipment necessary to perform the testing and flushing as outlined below.

1.2 SECTION INCLUDES

A. Disinfection sequence

B. Filling of potable water mains.

C. Testing of pressure lines

D. Flushing of potable water mains.

1.3 RELATED SECTIONS

A. Section 02535 - Piping Systems Installation

B. Section 02726 - Water Line Disinfection

PART 2 MATERIALS

2.1 CORPORATION STOPS

A. The Contractor shall provide corporation stops and saddles, at intervals no greater than 6 miles, to facilitate planned testing and disinfection sequences and procedures. After use is complete, the corporation stop will be replaced with a brass plug. Corporation stops shall be as specified in Section 15100 - Valves.

2.2 WATER

A. Water for filling and flushing lines shall be furnished by Owner at no cost to the Contractor

2.3 ACCESSORIES

A. Contractor shall furnish all equipment and material including temporary flanges, plugs, valves, fittings, etc., for testing. All materials are subject to approval by the Engineer.

PART 3 EXECUTION

3.1 DISINFECTION SEQUENCE

A. For disinfection sequence and procedures, refer to Section 02726 - Water Line Disinfection.

3.2 FILLING OF WATER MAINS

A. The water mains shall be constructed, backfilled, thrust blocking completed, and all necessary associated work completed before the water mains are filled.

B. Resident project representative shall review the details, sequence, and schedule of filling prior to beginning operation.
   1. The filling shall consider the City's system and water demands, and be done in such a manner and time so as to provide as little disruption of normal service as possible.
   2. Filling shall normally begin at low points in the main and be at such rate as to allow air to escape without entrapment through blowoffs or cleanouts.
   3. The rate of fill shall not be greater than that tolerable to the supplier's system.

C. Fill water mains with potable water only.

D. Where additional air releases are needed, the Contractor shall provide the necessary 3/4-inch corporation stops and saddles on the top of the pipe at high elevations to allow for the removal of air. Such taps shall be plugged with properly threaded brass plugs subsequent to the pressure and leakage test.

E. Some flushing may be done during the filling operation to ensure that all air is removed.

3.3 TESTING OF PRESSURE LINES

A. It has been observed that allowing the mains to be under some pressure for a few days after filling, and bleeding off at high points several times during this period, reduces the amount of entrapped air and aids testing.

B. It is the intent of this specification that all joints be watertight and free from leaks, and each leak which may be discovered, at any time prior to the expiration of one year after the date of final acceptance by the Owner, shall be repaired by and at the expense of the Contractor.

C. The Contractor may, at his convenience, make tests upon the system in addition to those listed above.

D. Allowing a lapse of at least 5 days after the placing of thrust or backing blocks, all newly-laid pipe and its appurtenances or any valved section thereof shall be subjected to pressure and leakage tests.

E. Tests to be observed by the Engineer are intended to be demonstrations of satisfactory performance. The Contractor shall satisfy himself that the section to be demonstrated will pass a test before requesting an observed test.

F. Cross-connection control. When existing water mains are used to supply test water, they should be protected from backflow contamination by temporarily installing a double check-valve assembly between the test and supply main or by other means approved by the purchaser. Prior to pressure and leakage testing, the temporary backflow protection should be removed and the main under test isolated from the supply main.

G. Procedure. The following procedure is based on the assumption that the pressure and leakage tests will be performed at the same time. Separate tests may be made if desired. If separate tests are made, the pressure test shall be performed first. Tests shall be performed only after the pipeline has been properly filled, flushed, and purged of all air. The specified test pressure shall be applied by means of an approved pumping assembly connected to the pipe in a manner satisfactory to the purchaser. The test pressure shall not exceed pipe or thrust-restraint design pressures. If necessary, the test pressure shall be maintained by additional pumping for the specified time during which the system and all exposed pipe, fittings, valves, and hydrants shall be carefully examined for leakage. All visible leaks shall be stopped. All defective elements shall be repaired or removed and replaced and the test repeated until the allowable leakage requirements have been met.

H. Test Method. The constructor may perform simultaneous pressure and leakage tests or perform separate pressure and leakage tests on the installed system at test durations and pressures specified

in Table 1. Test shall be witnessed by the purchaser or the purchaser's agent, and the equipment used for the test shall be subject to the approval of the purchaser or the purchaser's agent.

I. Allowable leakage. The constructor shall furnish the gauges and measuring device for the leakage tests, pump, pipe, connections, and all other necessary apparatus, unless otherwise specified, and shall furnish the necessary assistance to conduct the test. The duration of each leakage test shall be 2 hours, unless otherwise specified. During the test, the pipeline shall be subjected to the pressure listed in Table 1. Leakage shall be defined as the quantity of water that must be supplied into the pipe section being tested to maintain a pressure within 5 psi (34 kPa) of the specified leakage test-pressure after the pipe has been filled with water and the air in the pipeline has been expelled. No installation will be accepted if the leakage is greater than that determined by the formula:

$$L = \frac{SD\sqrt{P}}{148{,}000} \qquad \text{(Eq 1)}$$

Where:

L = allowable leakage, in gallons per hour
S = length of pipeline tested
D = nominal diameter of the pipe, in inches
P = average test pressure during the leakage test, in pounds per square inch (gauge)

Table No. 1 - System test methods

Procedure	Pressure	Duration of Test
Simultaneous Pressure and Leakage Tests	150% of working pressure* at point of test, but not less than 125% o normal working pressure at highest elevation. †	2 hrs
Separate Pressure Tests	150% of working pressure* at point of test, but not less than 125% o normal working pressure at highest elevation. †	1 hr
Separate Leakage Tests	150% of working pressure* of segment tested. †	2 hrs

* Working pressure is defined as maximum anticipated sustained operating pressure.
† In no case shall the test pressure be allowed to exceed the design pressure for pipe, appurtenances, or thrust restrains.

Table No. 2 - Allowable leakage per 1,000 ft of pipe* - gph†

Avg. Test Pressure, psi (kPa)		Nominal Pipe Diameter, in. (mm)											
		4 (100)	6 (150)	8 (200)	10 (250)	12 (300)	14 (350)	16 (400)	18 (450)	20 (500)	24 (610)	30 (760)	36 (915)
300	(2,070)	0.47	0.70	0.94	1.17	1.40	1.64	1.87	2.11	2.34	2.81	3.51	4.21
275	(1,900)	0.45	0.67	0.90	1.12	1.34	1.57	1.79	2.02	2.24	2.69	3.36	4.03
250	(1,720)	.043	0.64	0.85	1.07	1.28	1.50	1.71	1.92	2.14	2.56	3.21	3.85
225	(1,550)	0.41	0.61	0.81	1.01	1.22	1.42	1.62	1.82	2.03	2.43	3.04	3.65
200	(1,380)	0.38	0.57	0.76	0.96	1.15	1.34	1.53	1.72	1.91	2.29	2.87	3.44
175	(1,210)	0.36	0.54	0.72	0.89	1.07	1.25	1.43	1.61	1.79	2.15	2.68	3.22
150	(1,030)	0.33	0.50	0.66	0.83	0.99	1.16	1.32	1.49	1.66	1.99	2.48	2.98
125	(860)	0.30	0.45	0.60	0.76	0.91	1.06	1.21	1.36	1.51	1.81	2.27	2.72
100	(690)	0.27	0.41	0.54	0.68	0.81	0.95	1.08	1.22	1.35	1.62	2.03	2.43
75	(520)	0.23	0.35	0.47	0.59	0.70	0.82	0.94	1.05	1.17	1.40	1.76	2.11
50	(340)	0.19	0.29	0.38	0.48	0.57	0.67	0.76	0.86	0.96	1.15	1.43	1.72

* If the pipeline under test contains sections of various diameters, the allowable leakage will be the sum of the computed leakage for each size.
† To obtain leakage in liters per hour, multiply the values in the table by 3.72

These formulas are based on an allowable leakage of 10.5 gpd/mi/in. (0.978 L/day/km/mm) of nominal diameter at a pressure of 150 psi (1,030 kPa).

1. Leakage values determined by the above formulas are presented in Table 2.
2. When testing against closed metal-seated valves, an additional leakage per closed valve of 0.078 gph/in. (0.0012 L/h/mm) of nominal valve size shall be allowed.
3. When hydrants are in the test section, the test shall be made against closed hydrant valves.
4. All visible leaks shall be repaired, regardless of the amount of leakage.
5. Alternative allowable-leakage criteria may be used if specified by the purchaser.

3.4 FLUSHING OF POTABLE WATER MAINS

A. Thoroughly flush mains after successful completion of testing requirements. Flushing is no substitute for preventive measures taken before and during pipe installation of potable water mains. Certain contaminants resist flushing at any velocity.

B. Govern maximum rates and duration by the availability of potable water for flushing.

C. A minimum flushing velocity is 2.5 feet per second.

1. Rate of flow to produce this velocity in various diameters is as follows:

Pipe Size	G.P.M.
2-inch	25
4-inch	100
6-inch	220
8-inch	370
12-inch	880
14-inch	1,132
16-inch	1,565

D. Flush through cleanouts and fire hydrants.

E. Progress from points near the supply connection to the end of the main.

F. Take precautions so as not to damage property or drainage courses.

END OF SECTION

SECTION 02726

WATER LINE DISINFECTION

PART 1 GENERAL

1.1 This section applies to all work associated with the disinfection of newly installed water lines throughout the distribution system. The work shall consist of all labor and equipment necessary to perform the disinfection as outlined below.

1.2 SECTION INCLUDES

A. Disinfection Sequence

B. Disinfection of water mains

C. Disinfection of tie-ins to existing system

1.3 RELATED SECTIONS

A. Section 02530 - Piping System Products

B. Section 02535 - Piping System Installation

C. Section 02725 - Water Line Testing and Flushing

1.4 RELATED DOCUMENTATION

A. Disinfection Procedures - (Included)

1.5 SUBMITTALS

A. The Contractor shall submit the following items, in accordance with Section 01300:
1. Product data for review: Product information and Material Safety Data Sheet for disinfection chemical.
2. Contractor to provide lab tests of water samples from new pipeline to verify successful disinfection.

PART 2 WATER MAIN DISINFECTION PROCEDURES

All new or repaired potable water lines in the public water supply system must be disinfected before they are put into service. These disinfection procedures are based on the AWWA Standard for Disinfecting Water Mains, C651-92.

2.1 NONEMERGENCY WATER MAIN DISINFECTION PROCEDURES

The basic steps in nonemergency disinfection of water mains are the following:

1. Prevent the introduction of contaminated material into the main during the installation process.
2. Flush the main or otherwise utilize methods to remove any contaminants that have entered the main.
3. Chlorinate the main by use of the tablet, continuous, or slug method and maintain the specified chlorine residual for the minimum required contact time.
4. Flush the heavily chlorinated water from the main. Dispose of the chlorinated water in a manner that will not adversely impact the environment.
5. Confirm the effectiveness of the disinfection procedure through bacteriological testing.

Step 1. Preventive Measures During Construction

During construction, the interior as well as all sealing surfaces of pipe, fittings, and other accessories should be kept clean as possible. Inspect the interior of all pipes prior to installation. If dirt enters the pipe, it should be removed and the affected interior of the pipe swabbed with a 1 percent chlorine solution. All openings in pipelines should be closed with watertight plugs whenever the trench is unattended. Sealing, lubricating, or gasket materials used in pipe installation should be stored and handled in a manner that avoids contamination and be suitable for use with potable water.

Step 2. Preliminary Flushing of Mains

Before being chlorinated, the main should be completely filled with water to eliminate air pockets and then flushed to purge the line of dirt and debris. This is typically conducted after the completion of the leakage and pressure tests. Ineffective removal of dirt and debris from lines prior to disinfection often leads to failed bacterial tests, requiring repeated disinfection. Preliminary flushing should be accomplished at a rate of at least 2.5 ft/sec. See Section 02725.

Water needed to flush and disinfect after the initial procedure shall be purchased from the District at the residential rate as stated on the monthly water billing.

Fittings and valves should be thoroughly cleaned before applying chlorine to a main. Special attention should be given to mechanical joints, fittings, and valves which may contain spaces that are difficult to chlorinate once they become filled with water.

Table 1 shows the required flow rate to obtain a velocity of 2.5 ft/sec in commonly used sizes of pipe. Flushing can be enhanced by the use of soft pigs to remove dirt, debris, and air from the main prior to disinfection. The use of pigs can also conserve water and are particularly useful when there is insufficient water supply to attain a 2.5 ft/sec minimum flushing velocity.

TABLE 1 - FLOWS REQUIRED FOR VARIOUS FLUSHING VELOCITIES

Pipe Size (in)	Pipe Area (sq. ft.)	Flow Required for Given Velocity (gpm) 1 ft/s	2.5 ft/s	5 ft/s
2	0.02	10	25	50
4	0.09	40	100	200
6	0.20	90	220	440
8	0.35	155	390	780
10	0.55	245	610	1,220
12	0.79	350	880	1,760
14	1.07	480	1,200	1,400
16	1.40	625	1,570	3,140

Step 3. Chlorination of Mains

Chlorine is available in three chemical forms: one of which is approved for this project.

a) Sodium Hypochlorite - Available in liquid form in 1 qt to 5 gal containers and contains approximately 5 to 15 percent-available chlorine. It includes common household bleaches such as Chlorox or Purex which typically contain approximately 5 to 6 percent-available chlorine. Special precautions must be taken to minimize deterioration of sodium hypochlorite solution in storage.

AWWA Standard C651 provides for three methods of chlorination for water mains: tablet, continuous, and “slug”. The continuous method is the only preapproved method accepted in this specification. The chlorine dose and minimum contact time for each AWWA method are summarized in Table 2. Recommendations for disinfection of small sections of mains under emergency repair are also included in Table 2. Methods for measurement of free chlorine residual

are summarized in attachment A. Before any disinfection method is utilized, valves must be positioned so that the highly chlorinated water in the main being treated does not flow into water mains in active service.

TABLE 2 - CHLORINATION METHODS FOR DISINFECTING WATER MAINS

Chlorination Method Used	Initial Chlorine Dose (mg/L)	Minimum Contact Time (hours)	Minimum Chlorine Residual (mg/L)
Non-Emergency Procedures			
Continuous	25	24	10
Slug	100	3	50
Emergency Procedures			
Premixed Solution or Hypochlorite Injection	300	0.25	100
Swabbing	10.00 (1% solution)	---	Swab thoroughly the interior of pipes and fittings used in repairs

Factors to consider when choosing a method of chlorination include length and diameter of the main, type of joints present, equipment and materials necessary for disinfection, skills and training of personnel, safety concerns, and whether the main must be put into service on a rapid basis. The continuous and "slug" methods require the use of appropriate chlorine feed equipment and the determination of the necessary chlorine feed rate for the chlorine solution. In long, large-diameter mains, the slug method has the potential for reduction in water and chemicals as compared to the continuous method.

1) Continuous Method

Though this method is referred to as "continuous", it does not require continuous feeding of chlorine into the main over a 24-hour period. The key feature is that the main is "continuously" in contact with at least 10 mg/L free chlorine concentration over 24 hours with an initial dose of 25 mg/L.

Procedure 1 - Injection of Concentrated Chlorine Solution

An alternate approach is to inject a concentrated chlorine solution into the main while filling. The contractor or operator maintains a desired flow rate of water filling the main through an inlet valve on a temporary connection from the existing distribution system or other approved source. At a point no more than 10 ft downstream from the inlet to the main, the concentrated chlorine solution is pumped into the main at a uniform feed rate until the desired chlorine residual (at least 25 mg/L) is measured in the flushed water at the terminal outlet. The main is then shut down and the chlorinated water allowed to stand in the pipe for a 24 hr period. At the end of this time period, the treated water in all portions of the main should have a chlorine residual of not less than 10 mg/L free chlorine as confirmed by measurement of the chlorine residual (see Attachment A).

The concentrated chlorine solution may be prepared from sodium hypochlorite and injected into the main with a chemical-feed pump designed for chlorine solutions. Feed lines and connections should be of such material and strength as to safely withstand the corrosive effect of the concentrated chlorine solution and the pressure of the pump. The flows of water filling the main and the concentrated chlorine solution must be proportioned so that the resulting chlorine concentration in the main is uniform and at least 25 mg/L. (See Figure 2)

In most cases, the chlorine solution injection rate, $Q_{cl\text{-}sol}$, will be significantly less than the rate of filling the main, Q_{fill}. When this is true, Q_{fill} may be considered essentially equivalent to the rate of water exiting the main, Q_{flush}. After startup of the clorine solution injection, the chlorine residual should be checked at the first available outlet, and the hypochlorite injection rate adjusted to obtain at least a 25 mg/L residual.

This approach, the injection of a concentrated chlorine solution into a flowing main is consistent with the typical chlorination procedure used by operators in disinfecting a continuous flow of water from a well using a hypochlorite feed system. It does, however, require the maintenance of a specific main filling rate (or flushing rate from the outlet of the pipe) as well as a uniform chlorine solution injection rate. Flow rates may be difficult to measure accurately under field conditions which typically involve temporary connections. In addition to the use of flow meters, methods for estimating flow rates include measuring the time to fill a container of known volume or measuring the trajectory of the discharge from a hydrant and using the formula in Figure 1.

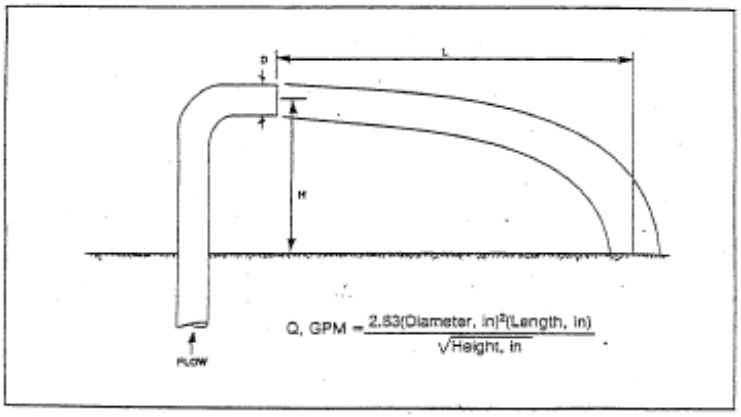

Figure 1 - FORMULA FOR ESTIMATING RATE OF DISCHARGE

Reproduced from Water Distribution System Operation and Maintenance, 2nd Ed. (1981), with permission. Copyright by the California State University, Sacramento Foundation.

The chlorine feed rate into the main, Cl_{feed}, for a 25 mg/L dose (assuming 100%-available chlorine such as supplied by chlorine gas) may be calculated with the following equation:

where,

Q_{fill} = flow rate of water filling main (gpm)
Cl_{feed} = chlorine feed rate into main (lb of Cl as 100%-avail./hr)

In chlorine feed rate problems, the chlorine solution injection rate, $Q_{cl\text{-}sol}$, and the filling rate of the main, Q_{fill}, are typically assumed and fixed. Where the chlorine solution is applied uniformly to the main during its filling, the time of filling of the main, T_{fill}, is essentially equivalent to the time of chlorine solution injection, $T_{injection}$:

where,

Vol_{main} = volume of main (gal)
Q_{fill} = main filling rate (gpm)
T_{fill} = time to fill main (min)
$T_{injection}$ = time of chlorine solution injection (min)

The minimum volume of chlorine solution, prepared from sodium hypoclorite, may be determined by multiplying the chlorine solution injection rate by the time of chlorine solution injection:

where,

$Q_{cl\text{-}sol}$ = rate of chlorine solution injection (gpm)
$T_{injection}$ = time of chlorine solution injection (min)
$Vol_{cl\text{-}sol}$ = volume of chlorine solution (gal)

Procedure 2 - Use of Sodium Hypochlorite

Sodium hypochlorite is available in liquid form as a concentrated chlorine solution expressed typically in percent-available chlorine, where 1-percent available chlorine is approximately equivalent to 10,000 mg/L chlorine. Strong solutions of sodium hypochlorite, such as 15 percent, may be injected directly into a flowing main with a chemical feed pump without the necessity of dilution. In such cases the concentration of chlorine in the injected solution is known. For an assumed sodium hypochlorite solution injection rate, $Q_{cl\text{-}sol}$, the filling rate of the main, Q_{fill}, can be determined from the following equation:

where,

$Q_{cl\text{-}sol}$= rate of sodium hypochlorite solution injection (gpm)
$Conc_{cl\text{-}sol}$ = chlorine concentration in injected solution (mg/L)
Q_{fill} = main filling rate (gpm)

The following equation determines the necessary amount of sodium hypochlorite to achieve a 25 mg/L chlorine dose in a given main:

where,

Vol_{main} = volume of main, gal
$Conc_{cl\text{-}sol}$ = concentration of chlorine in sodium hypochlorite solution, mg/L
$Vol_{cl\text{-}sol}$ = volume of sodium hypochlorite, gal

The quantities of 15-percent available sodium hypochlorite or 65-percent available calcium hypochlorite (HTH) required to produce a 25 mg/L concentration in water filling a section of main with a length of 100 ft in common diameters are shown in Table 3.

Table 3 includes the minimum volume of various sodium hypochlorite solutions (1%, 5%, 10%, and 15%) for direct injection into a 100-ft main to prepare a 25 mg/L chlorine dose. Eq. 2 above may also be used to calculate the required volume of chlorine solution as sodium hypochlorite for a given Vol_{main}, Q_{fill}, and $Q_{cl\text{-}sol}$. For a given Q_{fill}, Eq. 1 above may be utilized to calculate the necessary chlorine feed rate into the main, which is converted to a sodium hypochlorite feed rate by the following equation:

TABLE 3 - HYPOCHLORITE REQUIRED TO PRODUCE 25-mg/L DOSE IN 100 ft OF PIPE

Pipe Size (in)	Total Pipe Volume (gal)	Percent Available Chlorine: 1 Percent (gal)	5 Percent (gal)	10 Percent (gal)	15 Percent (gal)	65 Percent (ounces)
		Hypochlorite Solution				Granules
2	16.3	0.34	0.0082	0.0041	0.0027	0.084
4	65.3	1.4	0.033	0.016	0.011	0.34
6	147	3.1	0.073	0.037	0.024	0.75
8	261	5.4	0.13	0.065	0.044	1.3
10	408	8.5	0.20	0.10	0.068	2.1
12	587	12.2	0.29	0.15	0.098	3.0
16	1,044	21.8	0.52	0.26	0.17	5.4

Note: 1 percent chlorine solution = 10,000 ppm or mg/L free chlorine.

If a sodium hypochlorite solution just be diluted with water to prepare a given volume of less concentrated chlorine solution for injection into the main (e.g., diluting a 15 percent strength solution to form a 5-percent solution), the following equation may be used to determine the necessary volume of concentrated sodium hypochlorite:

2) Slug Method (This method is not pre-approved)

The slug method consists of the formation of a solid column or “slug” of chlorinated water in the main with a free chlorine concentration of at least 100 mg/L. This “slug” of highly chlorinated water must flow through the main at a slow enough rate so that all parts of the

main and its appurtenances will be exposed to the highly chlorinated water for a period of at least 3 hr. As the "slug" passes tees, crosses, etc. valves must be operated to ensure their disinfection. This method would be appropriate for very large and long mains where continuous feed is impractical. This method could also be used with smaller mains of limited length where due to time constraints, a 24 hour contact time is not available to comply with the continuous method. By application of the higher initial chlorine dose of 100 mg/L, the required minimum contact time is reduced from 24 hr to 3 hr.

The free chlorine residual must be regularly measured in the "slug" during the required 3-hr minimum contact time. If at any time, the free chlorine residual drops below 50 mg/L, additional chlorine must be applied to the head of the "slug" to restore the free chlorine in the "slug" to not less than 100 mg/L.

Step 4 - Final Flushing of Mains

After the applicable minimum retention period, highly chlorinated water should be flushed from the main until chlorine residual measurements show that the concentration in the water leaving the main is no higher than that generally prevailing in the distribution system. Care must be exercised when disposing of water with high free chlorine residuals. Chlorine is toxic to fish and other aquatic life. Disposal of highly chlorinated water to storm sewers should be avoided without neutralization of the chlorine residual where the sewer discharges directly to a creek, river, or lake.

Neutralization of the chlorine residual remaining in the water can be accomplished by application of a neutralizing chemical such as sulfur dioxide (SO_2), sodium bisulfite ($NaHSO_3$), sodium sulfite (Na_2SO_3) or sodium thiosulfate ($Na_2S_2O_3 \bullet 5H_2O$) in a temporary retention pond, container, or tanker truck. The amount of these chemicals to neutralize various residual chlorine concentrations in 100,000 gallons of water is listed in Table 4. There is also significant reduction of free available chlorine in open ponds or containers primarily due to destruction by sunlight.

TABLE 4 - AMOUNTS OF CHEMICALS REQUIRED TO NEUTRALIZE VARIOUS RESIDUAL CHLORINE CONCENTRATIONS IN 100,000 GALLONS OF WATER

Residual Chlorine Concentration (mg/L)	Chemical Required			
	Sulfur Dioxide (lb)	Sodium Bisulfate (lb)	Sodium Sulfate (lb)	Sodium Thiosulfate (lb)
1	0.8	1.2	1.4	1.2
10	8.3	12.5	14.6	12.0
25	20.9	31.3	36.5	30.0
50	41.7	62.6	73.0	60.0

Adapted from AWWA Standard C651-92

Step 5 - Bacteriological Tests (Optional)

AWWA Standard C651-92 requires that after final flushing two consecutive sets of bacteriological samples be collected from the new main. At least one set of samples shall be collected at all test sections of the new main at length no greater than 6 miles, plus one set from the end of the line and at least one set from each branch. The bacteriological test required is for the presence of coliform organisms in accordance with *Standard Methods for the Examination of Water and Wastewater*.

A brief summary of bacteriological sampling procedures and analytical methods is provided as Attachment B.

2.2 Emergency Water Main Disinfection Procedures

When repairs require that mains be opened and depressurized under emergency conditions such as a break or other physical failure of the pipeline, the necessity to restore water service as soon as possible prevents complete compliance with the routine main disinfection procedures of AWWA Standard C651-92. Alternate disinfection procedures under such conditions were described in detail in an article by R. Scott Yoo, "procedures for Emergency Disinfection of Mains," *Opflow*, Vol 12, No. 1, (January 1986). The following recommended procedures are based in part on this article:

1. Minimize the entry of contaminants into the repaired main. If possible, repair the break without depressurizing the main by use of clamps, sleeves, or other devices. If the main must be shut down and depressurized during repair, excavated areas should be dewatered to the extent practical to prevent dirty water from contacting the pipe. If a pipe is cut and a section removed, examine the inside of the remaining pipe ends and remove pieces of pipe, scale, or other debris. Provide temporary plugs to open ends of pipes.
2. If the main has been depressurized and opened, disinfect the pipe by swabbing with a concentrated chlorine solution or by maintaining a high chlorine residual in the repaired section of main for a brief contact period. The swabbing method is quick and is generally effective under repair conditions which do not pose a threat of significant contamination. The swabbing method, however, should not be utilized where there is a potential for significant contamination of the main (for example, sewage is detected in the trench during repairs).
   a. Swabbing Method. All new pieces of pipe, couplings, clamps, sleeves, and other materials used in repair are thoroughly swabbed with a concentrated (1-percent available) chlorine solution to disinfect all surfaces which will come in contact with potable water. The 1-percent chlorine solution may be prepared by adding 2 oz of calcium hypochlorite (65-percent available chlorine) or 26 fl oz of household bleach (5-percent available chlorine) to 1 gal of water. The chlorine solution is typically applied using clean rags or a sprayer. Longer pieces of pipe may be disinfected using a clean mop. When working with hypochlorite compounds, proper personal protection should be worn such as rubber gloves, goggles, and respiratory protection under conditions of inadequate ventilation.
   b. Hypochlorite Injection or Addition of Premixed Solution. In these methods of disinfection, a high chlorine residual is maintained in the repaired section of main for a brief contact period.

      Preliminary Steps - Both methods require the repaired section of main be isolated from the distribution system. This will require the shut off of all service connections along the section of main to be disinfected. Temporary connections for filling the main with water as well as a method of flushing the main through a hydrant or other temporary outlet must be provided. The isolated section of main must be initially flushed to remove dirty water, debris, and air.

      Hypochlorite Injection - In the hypochlorite injection method, liquid sodium hypochlorite is injected into the flowing main by means of a chemical-feed pump to achieve a high chlorine residual. The initial required chlorine dose is 300 mg/L, verified by measuring chlorine residuals in the flushed water through an outlet in the end of the section. The minimum amount of hypochlorite solution, which is required to treat one pipe volume with an initial chlorine dose of 300 mg/L, can be calculated using the following equation:

Where,

$Conc_{cl\text{-}sol}$ = concentration of chlorine in sodium hypochlorite solution in mg/L, where 1-percent CL solution is approximately equal to 10,000 mg/L.
Vol_{main} = volume of main, gal
$Vol_{cl\text{-}sol}$ = volume of sodium hypochlorite as a chlorine solution, gal

Table 5 includes the minimum volumes of sodium hypochlorite solution (5- and 12.5-percent available chlorine) necessary to achieve an initial chlorine dosage of 300 mg/L in 100 ft of main. Volumes in excess of the table values will be necessary because pumping must continue until the minimum chlorine dose is verified at the flushing outlet.

TABLE 5 - HYPOCHLORITE REQUIRED PER 100 FT OF MAIN

		Hypochlorite Solution				Hypochlorite Granules	
	Total	Gallons of 5 percent		Gallons of 12.5 percent		Ounces of 65 percent	
Pipe Size (in)	Pipe Volume (gal)	100 mg/L Dose	300 mg/L Dose	100 mg/L Dose	300 mg/L Dose	100 mg/L Dose	300 mg/L Dose
2	16.3	0.03	0.1	0.013	0.039	0.33	1.0
4	65.3	0.13	0.39	0.052	0.16	1.3	4.0
6	147	0.29	0.88	0.12	0.35	3.0	9.0
8	261	0.52	1.6	0.21	0.63	5.4	16.1
10	408	0.82	2.4	0.33	0.98	8.4	25.1
12	587	1.2	3.5	0.47	1.4	12.1	36.2
16	1,044	2.1	6.3	0.84	2.5	21.4	64.3

Note: 5-percent chlorine solution = 50,000 ppm or mg/L free chlorine.

Addition of Premixed Solution - An Alternate method is the preparation of a premixed chlorine-water solution in sufficient volume to completely fill the repaired section of main. A hypochlorite compound is added to potable water in a tanker truck or other large container to form a solution with at least 300 mg/L free chlorine (see Table 5). The solution from the tanker truck or large container is pumped into the repaired section of main until the main is full as indicated by a discharge through a hydrant or other outlet at the other end of the section.

Minimum Contact Period - The minimum contact period for an initial chlorine dose of 300 mg/L is 15 minutes. After the minimum 15-minute contact period, a chlorine residual of at least 100 mg/L should be verified. Lower initial chlorine doses may be used for longer contact periods (e.g., 100 mg/L initial chlorine dose with a 3-hr contact time).

Final Steps - The heavily chlorinated water is flushed from the main until the chlorine residual is reduced to the level normally present in water supplied to the area. Consideration should be given to the collection of bacteriological samples after disinfection is completed to provide a record of the effectiveness of the procedures where repairs were conducted under conditions which posed a threat of significant contamination.

Attachment A

Methods for Total Chlorine Residual Measurement

Methods for determining total chlorine include amperometric titration, colorimetric DPD, titrimetric DPD, and Iodimetric titration. The most widely used method for field test dsituations is colorimetric DPD. In this method DPD (N,N-diethyl-p-phenylenediamine) is oxidized by chlorine causing a magenta (red) color. The intensity of the color is directly proportional to the chlorine concentration in the sample. Colorimetric DPD field test kits are available from several suppliers. The basic procedure for the DPD Colorimetric method include the following steps:

1) Collect a water sample in the sample tube of the DPD test kit.

2) Add DPD color reagent to the water sample.

3) Match color sample with a color on the comparator to estimate the chlorine residual in mg/L.

Each chlorine test kit is designed to measure total residual chlorine only within a certain range of concentration. The low range instruments typically measure total residual chlorine in concentrations no higher than 3.5 to 5 mg/L. Some manufacturers have produced high range test kits which are capable of measuring chlorine at the level of doses required for disinfection of water mains, e.g. 25 mg/L. However, a low range test kit can be used to measure a chlorine concentration higher than the kit's range by dilution. This dilution method can be performed in two ways:

1) Graduated Cylinder Method

a) Collect a 2 mL sample of highly chlorinated water and pour the sample into an empty graduated cylinder (50 mL or greater). Add chlorine free water (distilled) for a total of 50 mL and shake gently. Distilled water can be purchased in most grocery and convenience stores in gallon containers.

Figure A-1. Dilution of Sample

b) From the graduated cylinder, collect a sample for total residual chlorine analysis using the DPD test kit in the quantity required for the particular kit. Add DPD reagent and estimate chlorine residual based on a colorimetric comparison with the standard according tot he instructions for the particular kit.

c) Multiply the estimated chlorine concentration by the dilution factor, which is calculated as follows:

Where 2 mL of sample is combined with 48 mL of distilled water in a graduated cylinder, the dilution factor is 24 as determined below:

For example, if it is determined that the diluted sample from the graduated cylinder has a chlorine residual of 1 mg/L, the undiluted sample from the disinfected main would have a residual of 25 X 1 mg/L or 25 mg/L. If it is not possible to accurately determine the chlorine residual of the undiluted sample, it may be necessary to provide a different dilution to the sample. For example, if it is anticipated that the chlorine residual is around 100 mg/L (slug method), a more appropriate dilution factor would be 50. This could be obtained by diluting 1 ml of sample with 49 ml of chlorine free water.

2) DPD Drop Dilution Method

a) Add 10 mL of distilled water and one premeasured packet or powder pillow of DPD reagent (or 0.5 mL of DPD solution) to the sample tube of the DPD test kit.

b) Using an eye dropper, add a sample of the highly chlorinated water being tested on a drop-by-drop basis to the sample tube until a color is produced.

c) Record the number of drops added to the sample tube. Assume one drop equals 0.05 mL.

d) Determine the chlorine residual in the sample tube containing the drops of sample, 10 mL of distilled water, and DPD reagent by means of a colorimetric comparison with the standard according to the specific instructions on the DPD test kit.

e) Estimate the chlorine residual in the chlorinated sample from the disinfected main by use of the following equation:

For example, assume three drops of chlorinated water from the disinfected main produced a chlorine residual of 0.2 mg/L in 10 mL of distilled water in the sample DPD tube. The chlorine residual in the sample of chlorinated water from the disinfected main is determined by use of Eq. A2 as follows:

Attachment B

Bacteriological Sampling and Analysis

AWWA C651-92 provides that two consecutive sets of samples, taken at least 24 hours apart, shall be collected from the main and analyzed for bacteriological contamination. If initial bacteriological samples are unsatisfactory, the new main shall be reflushed and additional samples collected and analyzed. According to AWWA C651-92, if any of the check samples are also unsatisfactory, results are achieved.

Analysis Methods

AWWA Standard C651-92 provides that bacteriological test of the disinfected main should be conducted in accordance with Standard Methods for the Examination of Water and Wastewater and show the absence of coliform organisms. Total coliform is the indicator group of bacteria for use in monitoring drinking water. The Maximum Contaminant Level for total coliforms as determined by the Safe drinking Water Act is now based on the presence or absence of the indicator bacteria, not on density or direct count. There are four standard laboratory techniques that are approved for coliform analysis:

- MMO-MUG
- multiple tube fermentation (MTF)
- presence-absence (PA)
- membrane filtration (MF)

Number of Samples

AWWA Standard C651-92 provides that at least one set of samples for bacteriological analysis should be collected from every test section of the new water main, one set from the end of the line, and at least one set from each branch. If trench water or excessive quantities of dirt has entered the new main during construction, AWWA Standard C651-92 specifies that samples should be taken at intervals of approximately 200 ft and shall be identified by location.

Sample Collection Procedures

1. Use only sterile bottles furnished by the laboratory. Keep the bottles sealed until used. Each sample bottle should contain a dechlorinating agent (typically, sodium thiosulfate) in sufficient amount to neutralize any residual chlorine in the water sample. Do not rinse the bottle prior to taking the sample as such rinsing will remove the dechlorinating agent and render the subsequent sample invalid.

2. Try to avoid collecting your sample from a hose or fire hydrant. Such outlets will often contaminate the sample leading to unsatisfactory results. AWWA Standard C651-92 recommends the use of a specially installed sampling tap consisting of a smooth, unthreaded, ½-inch hose bib. A corporation stop installed in the main equipped with a copper-tube gooseneck assembly can also function as a sampling tap.

3. Be sure that the heavily chlorinated water has been thoroughly flushed from the main before sampling. Run water through the sampling tap at a steady rate 3 to 5 minutes before beginning sampling procedure.

4. Wash hands thoroughly. Remove the bottle lid just before filling, holding the lid with your free hand. Do not contaminate the inner surface of the cap of the bottle with your hands. Fill the bottle to the shoulder or fill line. Do not overflow the bottle or splash water on the outside of the bottle. Replace the lid and tighten securely.

5. Complete the appropriate sample documentation provided by the laboratory. This will typically include a sample label and chain of custody form.

6. Deliver the samples to the laboratory promptly after collection. There are strict time limits on the amount of time that may elapse between sample collection and analysis before the sample is considered too old to analyze. Check with your laboratory on sample holding time requirements. The KDHE laboratory requires samples reach their lab within 30 hours of collection. Unless special arrangements are made, avoid having the sample arrive at the laboratory on weekends or holidays.

7. Samples should be held at a temperature of 4ºC. If practicable, place samples in an iced cooler for storage during transport if transport time will exceed 1 hour. At no time, however, should the sample container be allowed to become immersed or submerged in the ice or melted ice water. Check with your laboratory for specific packaging and transport recommendations.

END OF SECTION

SECTION 02922

SEEDING

PART 1 GENERAL

1.1 SUMMARY

A. Section includes: This section covers the operations necessary to establish a grass cover for stabilizing soils on new slopes and swales and in areas damaged by trenching and construction operations.

B. Contractor shall perform all clearing, grading, fertilizing, preparing of seedbed, seeding, covering and firming of seed into the soil, application of mulch and maintenance.

1.2 RELATED SECTIONS

A. Section 01300 - Submittals

B. Section 02250 - Temporary Erosion Control

1.3 SUBMITTALS

A. The Contractor shall submit the following items, in accordance with Section 1300 - Submittals:

1. Product data for review:
   a) Representative labels bearing the composition of seed mixtures.

2. Product data for information:
   a) Copies of suppliers' invoices for all seed, mulch and fertilizer showing the weight purchased for the project.

3. Manufacturer's certifications for review:
   a) Manufacturer's certifications stating purity and components of seed bags and mixtures.

1.4 GUARANTEE

A. The Contractor shall unconditionally guarantee a stand of grass that is reasonably uniform in density and reasonably free of weeds and otherwise acceptable to the Owner.

PART 2 PRODUCTS

2.1 SEED

A. Seed: All seed shall be labeled in accordance with U.S. Department of Agriculture Federal Seed Act. Seeds shall be free of prohibited weed seeds and shall contain no more than one percent of noxious weed seeds.

1. Seeds shall be delivered to the site in convenient, fully labeled containers bearing the name, trade name or trademark and warranty of the manufacturer with a certificate of the purity and germination of each kind of seed.

2. Type "A" seed mixture shall be used for established yards, shoulders and slopes in street right-of-way, at WWTP sites, and any other areas designated on the drawings. Type "A" seed mixture shall be as follows:

Type of Seeds	Minimum Pure Live Seed (%)	Rate of Pure Live Seed (Lbs. per Acre)
Alta Fescue or Kentucky 31 Fescue (Festuca Elatior Var. Arundinces)	75	25
Rye Grass (Lolium Perenne or L. Multiflorum)	80	25
Kentucky Blue Grass (Poa. Pratensis)	75	20
Creeping Red Fescue (Festuca Rubra)	85	10
Total		80 lb/acre

3. Type "B" seed mixture shall be used for areas outside of the street right-of-way which are not maintained and any other areas designated on the drawings. Type "B" seed mixture shall be as follows:

Type of Seeds	Minimum Pure Live Seed (%)	Rate of Pure Live Seed (Lbs. per Acre)
Alta Fescue or Kentucky 31 Fescue (Festuca Elatior	75	90
Rye Grass (Lolium Perenne or L. Multiflorum)	80	50
Total		140 lb/acre

2.2 FERTILIZER: Fertilizer shall be a complete commercial grade fertilizer applied at the rate of 87 pounds of plant available nitrogen per acre.

2.3 MULCH: Mulch shall be hay or straw with no viable seeds of noxious weeds. Mulch shall be spread uniformly over the seeded areas at the rate of 100 pounds per 1000 square feet and anchored into the soil a minimum of 3 inches to provide a standing stubble mulch.

PART 3 EXECUTION

3.1 PREPARATION

A. Clearing and stripping, earthwork, grading, and placement of topsoil shall be performed per specifications.

3.2 SEEDING

A. Seeding: Seeding shall be performed on all areas disturbed by construction that are not reestablished by sodding, pavement, gravel, driveways and other methods of reestablishment. Included shall be seeding, fertilizing, mulching, preparation of seed beds, and maintenance. The Contractor shall reseed any seeded areas that are not in good growing condition following the first full growing season (spring to fall).

1. Fertilizer shall be evenly distributed before tilling, at a rate of six hundred (600) pounds per acre (7 pounds per 500 square feet) and incorporated into the soil to a depth of at least two inches by disking or harrowing.
2. Those areas designated to be seeded shall be cleared and graded prior to tilling. The surface shall be tilled to a depth of at least two inches by disking or other approved methods until the surface is suitable for seeding. The prepared surface shall be maintained until seeding and mulching is completed to prevent gullies and depressions.
3. All seeding work shall be done between February 1 and April 15 or between August 15 and October 15. The specified seed shall be sowed using a mechanical spreader or drill at the application rate. Successive seeding strips shall be overlapped to provide uniform coverage.
4. Seed that is wet, moldy or otherwise damaged in transit or storage shall not be used. Seeding shall not take place when wind velocity exceeds five (5) miles per hour.
5. Immediately following completion of seeding, if in the Engineer’s judgment the seed bed is too loose or contains clods, the entire area shall be compacted using a roller weighing at least sixty (60) but not more than ninety (90) pounds per lineal foot of roller.
6. Within 24 hours of seeding, vegetative mulch shall be spread over all seeded areas. Mulch shall be spread uniformly with a mechanical spreader or other approved methods at a rate of two (2) tons per acre. Mulch shall be spread in a loosened condition with no lumps of compacted material. Mulch shall be anchored using a heavy disc harrow by no more than two passes of the harrow. Discs of the anchoring tool shall be set approximately nine inches apart. Mulch shall be anchored not cut.

7. Seeded areas shall be watered immediately following application of mulch to a depth of at least two (2) inches. Care shall be taken not to cause erosion or displacement of seed. Watering shall be repeated daily until a flourishing grass coverage is achieved. The seeded area shall be kept free of traffic. Any portion gullied, damaged or destroyed shall be repaired or re-established to the specified conditions at the Contractor's expense prior to acceptance by the Owner.
8. Maintenance: Maintenance shall include watering, as required, of the seed bed and resulting growth and replacement of any areas eroded by any causes.

END OF SECTION

03100

CONCRETE FORMWORK

PART 1 GENERAL

1.1 SECTION INCLUDES

A. Formwork for cast-in place concrete, with shoring, bracing and anchorage.
B. Openings for other work.
C. Form accessories.
D. Form stripping.

1.2 PRODUCTS INSTALLED BUT NOT FURNISHED UNDER THIS SECTION

A. Section 03200 - Concrete Reinforcement
B. Section 03300 - Cast-in-Place Concrete: Supply of concrete accessories for placement by this section.
C. Section 05500 - Metal Fabrications: Supply of metal fabrications for placement by this section.

1.3 RELATED SECTIONS

A. Section 03200 - Concrete Reinforcement.
B. Section 03300 - Cast-in-Place Concrete.

1.4 REFERENCES

A. ACI 301 - Structural Concrete for Buildings.
B. ACI 318 - Building Code Requirements for Reinforced Concrete.
C. ACI 347 - Recommended Practice For Concrete Formwork.
D. PS 1 - Construction and Industrial Plywood.

1.5 DESIGN REQUIREMENTS

A. Design, engineer and construct formwork, shoring and bracing to conform to design and code requirements; concrete to conform to required shape, line and dimension.

1.6 SUBMITTALS

A. Submit under provisions of Section 01300.
B. Product Data: Provide data on void form materials and installation requirements.

1.7 QUALITY ASSURANCE

A. Perform Work in accordance with ACI 347.

1.8 REGULATORY REQUIREMENTS

A. Conform to applicable code for design, fabrication, erection and removal of formwork.

1.9 FIELD SAMPLES

A. Provide under provisions of Section 01400. Coordinate with requirements stated in Section 03200

and 03300.

1.10 DELIVERY, STORAGE AND HANDLING

A. Deliver, store, protect and handle products to site under provisions of Section 01600.
B. Deliver void forms and installation instructions in manufacturer's packaging.
C. Store off ground in ventilated and protected manner to prevent deterioration from moisture.

1.11 COORDINATION

A. Coordinate work under provisions of Section 01039.
B. Coordinate this Section with other Sections of work that require attachment of components to formwork.
C. If formwork is placed after reinforcement resulting in insufficient concrete cover over reinforcement before proceeding, request instructions from Architect/Engineer.

PART 2 PRODUCTS

2.1 WOOD FORM MATERIALS

A. Plywood: Douglas fir species; grade B/B plyform class 1 or 2; sound undamaged sheets with clean, true edges.
B. Lumber: Douglas fir species; standard grade; with grade stamp clearly visible.

2.2 PREFABRICATED FORMS

A. Preformed Steel Forms: Minimum 16 gage matched, tight fitting, stiffened to support weight of concrete without deflection detrimental to tolerances and appearance of finished surfaces.
B. Pan Type: Steel of size and profile required.
C. Tubular Column Type: Round, spirally wound laminated fiber material, surface treated with release agent, non-reusable, of sizes required.
D. Void Forms: Moisture resistant treated paper faces, biodegradable, structurally sufficient to support weight of wet concrete mix until initial set; 2 inches thick.

2.3 FORMWORK ACCESSORIES

A. Form Ties: Snap-off type, galvanized metal, fixed length, cone type, with waterproofing washer, free of defects that could leave holes larger than 1 inch in concrete surface.

B. Form Release Agent: Colorless mineral oil which will not stain concrete, or absorb moisture, or impair natural bonding or color characteristics of coating intended for use on concrete.

C. Dovetail Anchor Slot: Galvanized steel, 22 gauge thick, foam filled, release tape sealed slots, anchors for securing to concrete formwork.

D. Flashing Reglets: Galvanized steel, 22 gauge thick, longest possible lengths, with alignment splines for joints, foam filled, release tape sealed slots, anchors for securing to concrete formwork.

E. Nails, Spikes, Lag Bolts, Through Bolts, Anchorages: Sized as required, of sufficient strength and character to maintain formwork in place while placing concrete.

F. Waterstops: Rubber, minimum 1,750 p.s.i tensile strength, minimum 50 degrees F to plus 175 degrees F working temperature range, wide, maximum possible lengths, ribbed profile, preformed

corner sections, heat welded jointing.

PART 3 EXECUTION

3.1 EXAMINATION

A. Verify lines, levels and centers before proceeding with formwork. Ensure that dimensions agree with drawings.

3.2 EARTH FORMS

A. Earth forms are not permitted.

3.3 ERECTION - FORMWORK

A. Erect formwork, shoring and bracing to achieve design requirements, in accordance with ACI 301.
B. Provide bracing to ensure stability of formwork. Shore or strengthen formwork subject to over stressing by construction loads.
C. Arrange and assemble formwork to permit dismantling and stripping. Do not damage concrete during stripping. Permit removal of remaining principal shores.
D. Align joints and make watertight. Keep form joints to a minimum.
E. Obtain approval before framing openings in structural members that are not indicated on Drawings.
F. Install void forms in accordance with manufacturer's recommendations. Protect forms from moisture or crushing.

3.4 APPLICATION - FORM RELEASE AGENT

A. Apply form release agent on formwork in accordance with manufacturer's recommendations.
B. Apply prior to placement of reinforcing steel, anchoring devices and embedded items.
C. Do not apply form release agent where concrete surfaces will receive special finishes or applied coverings that are affected by agent. Soak inside surfaces of untreated forms with clean water. Keep surfaces coated prior to placement of concrete.

3.5 INSERTS, EMBEDDED PARTS, AND OPENINGS

A. Provide formed openings where required for items to be embedded in passing through concrete work.
B. Locate and set in place items which will be cast directly into concrete.
C. Coordinate with work of other sections in forming and placing openings, slots, reglets, recesses, sleeves, bolts, anchors, other inserts and components of other Work.
D. Install accessories in accordance with manufacturer's instructions, straight, level and plumb. Ensure items are not disturbed during concrete placement.
E. Install water-stops continuous without displacing reinforcement. Heat seal joints watertight.
F. Provide temporary ports or openings in formwork where required to facilitate cleaning and inspection. Locate openings at bottom of forms to allow flushing water to drain.
G. Close temporary openings with tight fitting panels, flush with inside face of forms and neatly fitted so joints will not be apparent in exposed concrete surfaces.

3.6 FORM CLEANING

A. Clean forms as erection proceeds, to remove foreign matter within forms.
B. Clean formed cavities of debris prior to placing concrete.
C. Flush with water or use compressed air to remove remaining foreign matter. Ensure that water and debris drain to exterior through clean-out ports.
D. During cold weather, remove ice and snow from within forms. Do not use de-icing salts. Do not use water to clean out forms, unless formwork and concrete construction proceed within heated enclosure. Use compressed air or other means to remove foreign matter.

3.7 FORMWORK TOLERANCES

A. Construct formwork to maintain tolerances required by ACI 301.

3.8 FIELD QUALITY CONTROL

A. Inspect erected formwork, shoring, and bracing to ensure that work is in accordance with formwork design and that supports, fastenings, wedges, ties and items are secure.
B. Do not reuse wood formwork more than 2 times for concrete surfaces to be exposed to view. Do not patch formwork.

3.9 FORM REMOVAL

A. Do not remove forms or bracing until concrete has gained sufficient strength to carry its own weight and imposed loads.
B. Loosen forms carefully. Do not wedge pry bars, hammers or tools against finish concrete surfaces scheduled for exposure to view.
C. Store removed forms in manner that surfaces to be in contact with fresh concrete will not be damaged. Discard damaged forms.

END OF SECTION

03200

CONCRETE REINFORCEMENT

PART 1 GENERAL

1.1 SECTION INCLUDES

A. Reinforcing steel bars, wire fabric and accessories for cast-in-place concrete.

1.2 RELATED SECTIONS

A. Section 03100 - Concrete Formwork.
B. Section 03300 - Cast-in-Place Concrete.

1.3 REFERENCES

A. ACI 301 - Structural Concrete for Buildings.

B. ACI 318 - Building Code Requirements For Reinforced Concrete.

C. ACI SP-66 - American Concrete Institute - Detailing Manual.

D. ACI 315-99 – Details and Detailing of Concrete Reinforcement

E. ANSI/ASTM A82 - Cold Drawn Steel Wire for Concrete Reinforcement.

F. ANSI/ASTM A184 - Fabricated Deformed Steel Bar Mats for Concrete Reinforcement.

G. ANSI/ASTM A185 - Welded Steel Wire Fabric for Concrete Reinforcement.

H. ANSI/AWS D1.4 - Structural Welding Code for Reinforcing Steel.

I. ASTM A615 - Deformed and Plain Billet Steel Bars for Concrete Reinforcement.

J. AWS D12.1 - Welding Reinforcement Steel, Metal Inserts and Connections in Reinforced Concrete Construction.

K. CRSI - Concrete Reinforcing Steel Institute - Manual of Standard Practice.

L. CRSI - Placing Reinforcing Bars.

1.4 QUALITY ASSURANCE

A. Perform Work in accordance with CRSI - Manual of Standard Practice & ACI 318.

1.5 COORDINATION

A. Coordinate work under provisions of Section 01039.
B. Coordinate with placement of formwork, formed openings and other Work.

PART 2 PRODUCTS

2.1 REINFORCEMENT

A. Reinforcing Steel: ASTM A615, yield grade; deformed billet steel bars, unfinished.
B. Reinforcing Steel Plain Bar and Rod Mats: ASTM A704, ASTM A615, Grade 60; steel bars or rods, unfinished.
C. Stirrup Steel: ANSI/ASTM A82, unfinished.
D. Welded Steel Wire Fabric: ASTM A815; in flat sheets.

2.2 ACCESSORY MATERIALS

A. Tie Wire: Minimum gage annealed type.
B. Chairs, Bolsters, Bar Supports, Spacers: Sized and shaped for strength and support of reinforcement during concrete placement conditions including load bearing pad on bottom to prevent vapor barrier puncture.
C. Special Chairs, Bolsters, Bar Supports, Spacers Adjacent to Weather Exposed Concrete Surfaces: Plastic coated steel; size and shape as required.

2.3 FABRICATION

A. Fabricate concrete reinforcing in accordance with CRSI Manual of Practice ACI SP-66.

PART 3 EXECUTION

3.1 PLACEMENT

A. Place, support and secure reinforcement against displacement. Do not deviate from required position.
B. Do not displace or damage vapor barrier.
C. Accommodate placement of formed openings.
D. Conform to applicable code for concrete cover over reinforcement.

END OF SECTION

03300

CAST-IN-PLACE CONCRETE

PART 1 GENERAL

1.1 SECTION INCLUDES

A. Cast-In-Place Concrete floors, shear walls, foundation walls and supported slabs.
B. Floors and slabs on grade.
C. Control, expansion and contraction joint devices associated with concrete work, including joint sealants.
D. Equipment pads, light pole base, flagpole base, thrust blocks and manholes.

1.2 PRODUCTS FURNISHED BUT NOT INSTALLED UNDER THIS SECTION

A. Section 03100 - Concrete Formwork: Placement of joint device anchors in formwork.

1.3 RELATED SECTIONS

A. Section 03100 - Concrete Formwork: Formwork and accessories.
B. Section 03200 - Concrete Reinforcement.
C. Section 03346 - Concrete Floor Finishing.
D. Section 03370 - Concrete Curing.
E. Section 07900 - Joint Sealers.

1.4 REFERENCES

A. ACI 301 - Structural Concrete for Buildings.
B. ACI 302 - Guide for Concrete Floor and Slab Construction.
C. ACI 304 - Recommended Practice for Measuring, Mixing, Transporting and Placing Concrete.
D. ACI 305R - Hot Weather Concreting.
E. ACI 306R - Cold Weather Concreting.
F. ACI 318 - Building Code Requirements for Reinforced Concrete.
G. ANSI/ASTM D994 - Preformed Expansion Joint Filler for Concrete (Bituminous Type).
H. ANSI/ASTM D1190 - Concrete Joint Sealer, Hot-Poured Elastic Type.
I. ANSI/ASTM D1751 - Preformed Expansion Joint Fillers for Concrete Paving and Structural Construction (Non-extruding and Resilient Bituminous Types).
J. ANSI/ASTM D1752 - Preformed Sponge Rubber and Cork Expansion Joint Fillers for Concrete Paving and Structural Construction.
K. ASTM C33 - Concrete Aggregates.
L. ASTM C94 - Ready-Mixed Concrete.
M. ASTM C150 - Portland cement.
N. ASTM C260 - Air Entraining Admixtures for Concrete.

1.5 SUBMITTALS

A. Submit under provisions of Section 01300.
B. Product Data: Provide data on joint devices, attachment accessories and admixtures.

1.6 QUALITY ASSURANCE

A. Perform Work in accordance with ACI 301.

1.7 COORDINATION

A. Coordinate work under provisions of Section 01039.
B. Coordinate the placement of joint devices with erection of concrete formwork and placement of form accessories.

PART 2 PRODUCTS

2.1 CONCRETE MATERIALS

A. Cement: ASTM C150, Type I - Normal, Type II - Moderate, Type V - Sulfate Resistant.
B. Fine and Coarse Aggregates: ASTM C33.
C. Water: Clean and not detrimental to concrete.

2.2 ADMIXTURES

A. Air Entrainment: ASTM C260.

2.3 ACCESSORIES

A. Bonding Agent: Polymer resin emulsion.
B. Vapor Barrier: thick clear polyethylene film.
C. Non-Shrink Grout: Premixed compound consisting of non-metallic aggregate, cement, water reducing and plasticizing agents; capable of developing minimum compressive strength of 2,400 psi in 48 hours and 7,000 psi in 28 days.

2.4 JOINT DEVICES AND FILLER MATERIALS

A. Joint Filler Type A: ASTM D1751; ASTM D994; Asphalt impregnated fiberboard or felt, 1/2" thick; tongue and groove profile.
B. Joint Filler Type B: ASTM D1752; Closed cell polyvinyl chloride foam, resiliency recovery of 95 percent if not compressed more than 50 percent of original thickness.
C. Joint Filler Type C; ASTM D1752; Pre-molded sponge rubber fully compressible with recovery rate of minimum 95 percent.
D. Expansion Joint Devices: ASTM B221 alloy, extruded aluminum; resilient filler strip with a Shore A hardness of 35 to permit plus or minus 25 percent joint movement with full recovery; extruded aluminum cover plate, of longest manufactured length at each location, flush Mounted, color as selected.
E. Sealant: ASTM D1190; polymer based asphalt or coal tar and rubber compound.

2.5 CONCRETE MIX

A. All concrete shall be Type 1 cement with a compressive strength of 4,000 p.s.i. at 28 days.
B. Mix concrete in accordance with ACI 304. Deliver concrete in accordance with ASTM C94.
C. Use accelerating admixtures in cold weather only when approved by Architect/Engineer. Use of admixtures will not relax cold weather placement requirements.
D. Use calcium chloride only when approved by Architect/Engineer.
E. Use set retarding admixtures during hot weather only when approved by Architect/Engineer.
F. Add air entraining agent to normal weight concrete mix for work exposed to exterior. Requires Architect/Engineer’s approval of usage, proportion, and design.

PART 3 EXECUTION

3.1 EXAMINATION

A. Verify site conditions under provisions of Section 01039.
B. Verify requirements for concrete cover over reinforcement.
C. Verify that anchors, seats, plates, reinforcement and other items to be cast into concrete are accurately placed, positioned securely and will not cause hardship in placing concrete.

3.2 PREPARATION

A. Prepare previously placed concrete by cleaning with steel brush and applying bonding agent in accordance with manufacturer's instructions.
B. In locations where new concrete is dowelled to existing work, drill holes in existing concrete, insert steel dowels and pack solid with non-shrink grout.

3.3 PLACING CONCRETE

A. Place concrete in accordance with ACI 304 & ACI 301.
B. Notify Architect/Engineer minimum 24 hours prior to commencement of operations.
C. Ensure reinforcement, inserts, embedded parts, formed expansion and contraction joints are not disturbed during concrete placement.
D. Separate slabs on grade from vertical surfaces with ½” thick joint filler.
E. Place joint filler in floor slab pattern placement sequence. Set top to required elevations. Secure to resist movement by wet concrete.
F. Extend joint filler from bottom of slab to within 1/2 inch of finished slab surface. Conform to Section 07900 for finish joint sealer requirements.
G. Install joint devices in accordance with manufacturer's instructions.
H. Install construction joint devices in coordination with floor slab pattern placement sequence. Set top to required elevations. Secure to resist movement by wet concrete.
I. Install joint device anchors. Maintain correct position to allow joint cover to be flush with floor and wall finish.
J. Install joint covers in longest practical length, when adjacent construction activity is complete.
K. Apply sealants in joint devices in accordance with Section 07900.
L. Place concrete continuously between predetermined expansion, control and construction joints.
M. Do not interrupt successive placement; do not permit cold joints to occur.
N. Place floor slabs in pattern indicated on drawings.
O. Saw cut joints within 24 hours after placing. Use 3/16” thick blade, cut into 1/4 depth of slab thickness. If in-slab-heating is used cut joints 1/2 inch deep
P. Screed floors and slabs on grade level, maintaining surface flatness of maximum.

3.4 SEPARATE FLOOR TOPPINGS

A. Prior to placing floor topping, roughen substrate concrete surface and remove deleterious material. Broom and vacuum clean.
B. Place required dividers, edge strips, reinforcing, and other items to be cast in.
C. Apply bonding agent to substrate in accordance with manufacturer's instructions.

3.5 CONCRETE FINISHING

A. Provide formed concrete surfaces to be left exposed with smooth rubbed finish.
B. Finish concrete floor surfaces to requirements of Section 03346.

3.6 CURING AND PROTECTION

A. Immediately after placement, protect concrete from premature drying, excessively hot or cold temperatures, and mechanical injury.
B. Maintain concrete with minimal moisture loss at relatively constant temperature for period

necessary for hydration of cement and hardening of concrete.

C. Cure concrete floor surfaces to requirements of Section 03370.

D. Cure floor surfaces in accordance with ACI 308.

3.7 FIELD QUALITY CONTROL

A. Field inspection and testing will be performed in accordance with ACI 301 and under provisions of Section 01400.

B. Provide free access to Work and cooperate with appointed firm.

C. Submit proposed mix design to architect for review prior to commencement of Work.

D. Tests of cement and aggregates may be performed to ensure conformance with specified requirements.

E. Three concrete test cylinders will be taken for every 75 or less cu yards of concrete placed.

F. One additional test cylinder will be taken during cold weather concreting, cured on job site under same conditions as concrete it represents.

G. One slump test will be taken for each set of test cylinders taken.

3.8 PATCHING

A. Allow Architect/Engineer to inspect concrete surfaces immediately upon removal of forms.

B. Excessive honeycomb or embedded debris in concrete is not acceptable. Notify Architect/Engineer upon discovery.

C. Patch imperfections as directed.

3.9 DEFECTIVE CONCRETE

A. Defective Concrete: Concrete not conforming to required lines, details, dimensions, tolerances or specified requirements.

B. Repair or replacement of defective concrete will be determined by the Architect/Engineer.

C. Do not patch, fill, touch-up, repair, or replace exposed concrete except upon express direction of Architect/Engineer for each individual area.

END OF SECTION

03346

CONCRETE FLOOR FINISHING

PART 1 GENERAL

1.1 SECTION INCLUDES

A. Finishing slabs-on-grade.
B. Surface treatment with concrete hardener, non-skid finish and sealer.

1.2 RELATED SECTIONS

A. Section 03300 - Cast-in-Place Concrete: Prepared concrete floors ready to receive finish; control and formed expansion and contraction joints and joint devices.
B. Section 03370 - Concrete Curing.
C. Section 07900 - Joint Sealers.

1.3 REFERENCES

A. ACI 301 - Structural Concrete for Buildings.
B. ACI 302 - Guide for Concrete Floor and Slab Construction.
C. ASTM E1155 - Determining Floor Flatness and Levelness Using the F-Number System.

1.4 SUBMITTALS

A. Submit under provisions of Section 01300.
B. Product Data: Provide data on concrete hardener, sealer and slip resistant treatment, compatibilities and limitations.

1.5 MAINTENANCE DATA

A. Submit under provisions of Section 01700.
B. Maintenance Data: Provide data on maintenance renewal of applied coatings.

1.6 QUALITY ASSURANCE

A. Perform Work in accordance with ACI 301 and ACI 302.

1.7 DELIVERY, STORAGE AND HANDLING

A. Deliver, store, protect, and handle products to site under provisions of Section 01039.
B. Deliver materials in manufacturer's packaging including application instructions.

1.8 ENVIRONMENTAL REQUIREMENTS

A. Temporary Lighting: Minimum 200 W light source, placed above the floor surface, for each 100 square feet of floor being finished.
B. Do not finish floors until the interior heating system is operational.
C. Ventilation: Sufficient to prevent injurious gases from temporary heat or other sources affecting concrete.

1.9 COORDINATION

A. Coordinate work under provisions of Section 01039.
B. Coordinate the work with concrete floor placement and concrete floor curing.

PART 2 PRODUCTS

2.1 CURING/SEALING COMPOUNDS

A. Curing/sealing compound equal to Ashford Formula as distributed by:
Curecrete Chemical Company, Inc.
1201 W. Spring Creek Place
Springville, UT 84663
(801) 489-5663

PART 3 EXECUTION

3.1 EXAMINATION

A. Verify site conditions under provisions of Section 01039.
B. Verify that floor surfaces are acceptable to receive the work of this section.

3.2 FLOOR FINISHING

A. Finish concrete floor surfaces in accordance with ACI 301 and ACI 302.
B. Steel trowel surfaces that will receive carpeting, resilient flooring and seamless flooring.
C. Steel trowel surfaces that areas scheduled to be exposed.
D. In areas with floor drains, maintain design floor elevation at walls; slope surfaces uniformly to drains at nominal.

3.3 FLOOR SURFACE TREATMENT

A. Apply sealer in accordance with manufacturer's instructions on floor surfaces.

3.4 TOLERANCES

A. Maximum Variation of Surface Flatness for Exposed Concrete Floors: 1/4 inch.

END OF SECTION

03370

CONCRETE CURING

PART 1 GENERAL

1.1 SECTION INCLUDES

A. Initial and final curing of horizontal and vertical concrete surfaces.

1.2 RELATED SECTIONS

A. Section 03300 - Cast-In-Place Concrete.
B. Section 03346 - Concrete Floor Finishing.

1.3 REFERENCES

A. ACI 301 - Structural Concrete for Buildings.
B. ACI 302 - Recommended Practice for Concrete Floor and Slab Construction.
C. ACI 308 - Standard Practice for Curing Concrete.
D. ASTM C309 - Liquid Membrane-Forming Compounds for Curing Concrete.
E. ASTM D2103 - Polyethylene Film and Sheeting.

1.4 QUALITY ASSURANCE

A. Perform Work in accordance with ACI 301 and ACI 302.

1.5 DELIVERY, STORAGE, AND HANDLING

A. Deliver, store, protect, and handle products under provisions of Section 01600.
B. Deliver curing materials in manufacturer's packaging including application instructions.

PART 2 PRODUCTS

2.1 MATERIALS

A. Curing/sealing compound equal to Ashford Formula as distributed by:
Curecrete Chemical Company, Inc.
1201 W. Spring Creek Place
Springville, UT 84663
(801)489-5663

PART 3 EXECUTION

3.1 EXAMINATION

A. Verify substrate conditions under provisions of Section 01039.
B. Verify that substrate surfaces are ready to be cured.

3.2 EXECUTION - HORIZONTAL SURFACES

A. Cure floor surfaces in accordance with ACI 308.

3.3 EXECUTION - VERTICAL SURFACES

A. Cure surfaces in accordance with ACI 308.

3.4 PROTECTION OF FINISHED WORK

A. Protect finished Work under provisions of Section 01500.
B. Do not permit traffic over unprotected floor surface.

END OF SECTION

04100

MORTAR AND MASONRY GROUT

PART 1 GENERAL

1.1 SECTION INCLUDES

A. Mortar and grout for masonry.

1.2 RELATED SECTIONS

A. Section 04305 - Brick Masonry System.

1.3 QUALITY ASSURANCE

A. Perform work in accordance with ACI 530 and ACI 530.1.

1.4 ENVIRONMENTAL REQUIREMENTS

A. Maintain materials and surrounding air temperature to minimum 40 degrees F prior to, during, and 48 hours after completion of masonry work.
B. Maintain materials and surrounding air temperature to maximum 90 degrees F prior to, during, and 48 hours after completion of masonry work.

PART 2 PRODUCTS

2.1 MATERIALS

A	Premix Mortar:	ASTM C387, using gray cement, normal strength.
B.	Mortar Aggregate:	ASTM C144, standard masonry type.
C.	Hydrated Lime:	ASTM C207, Type S.
D.	Grout Aggregate:	ASTM C404.
E.	Water:	Clean and potable.
F.	Bonding Agent:	Epoxy type.

2.2 MORTAR MIXES

A. Mortar for Masonry below Grade and in Contact with Earth: ASTM C270, Type M.
B. Mortar for Reinforced Masonry: ASTM C270, Type S.
C. Mortar for Reinforced Masonry: ASTM C270, Type S.
D. Mortar for Non-load Bearing Walls and Partitions: ASTM C270, Type S or Type N.

2.3 MORTAR MIXING

A. Thoroughly mix mortar ingredients in quantities needed for immediate use in accordance with ASTM C270.
B. Add admixtures in accordance with manufacturer's instructions.
C. Do not use antifreeze compounds to lower the freezing point of mortar.

2.4 MORTAR COLOR

A. Mortar Color: Mineral oxide pigment, color as selected by Architect.

2.5 GROUT MIXES

A. Grout: Mixed in accordance with ASTM C476; provide consistency required at time of placement to fill completely all spaces indicated to be grouted.
   1. Use fine grout in spaces less than 2 inches in least horizontal dimension.
   2. Use coarse grout in spaces 2 inches or more in least horizontal dimension.

2.6 GROUT MIXING

A. Thoroughly mix mortar ingredients in quantities needed for immediate use in accordance with ASTM C476.
B. Do not use anti-freeze compounds to lower the freezing point of grout.

2.7 MIX TESTS

A. Testing of Mortar Mix: In accordance with ASTM C780
B. Testing of Grout Mix: In accordance with ASTM C1019.

PART 3 EXECUTION

3.1 INSTALLATION

A. Install mortar in accordance with ASTM C780.

B. Perform all grouting by means of low-lift technique.
   1. Maintain minimum dimension of 2 inches and minimum area of 6 square inches in cells to be grouted. Extend vertical reinforcement above pour height as required for splicing.
   2. Lay masonry units to maximum pour height, not to exceed 32 inches.
   3. Place grout continuously and consolidate immediately; do not interrupt pour for more than one hour.
   4. Stop vertical pours 1-1/2 inches below bond beams to interlock with vertical cores.

C. Work grout into masonry cores and cavities to eliminate voids. Do not displace reinforcement.

END OF SECTION

04300

UNIT MASONRY SYSTEM

PART 1 GENERAL

1.1 SECTION INCLUDES

A. Concrete masonry units.
B. Reinforcement, anchorage and accessories.
C. Pargeted masonry surfaces.

1.2 RELATED SECTIONS

A. Section 01400 - Quality Control.
B. Section 05500 - Metal Fabrications: Loose steel lintels and fabricated steel items.
C. Section 07900 - Joint Sealers: Rod and sealant at control and expansion joints.

1.3 REFERENCES

A. ACI 530 - Building Code Requirements for Masonry Structures.
B. ACI 530.1 - Specifications for Masonry Structures.
C. ASTM A82 - Cold-Drawn Steel Wire for Concrete Reinforcement.
D. ASTM C129 - Non-Load Bearing Concrete Masonry Units.
E. ASTM C744 - Pre-faced Concrete and Calcium Silicate Masonry Units.
F. UL - Fire Resistance Directory.

1.4 ENVIRONMENTAL REQUIREMENTS

A. Maintain materials and surrounding air temperature to minimum 40 degrees F prior to, during and 48 hours after completion of masonry work.

1.5 COORDINATION

A. Coordinate work under provisions of Section 01039.

PART 2 PRODUCTS

2.1 CONCRETE MASONRY UNITS

A. ASTM C90, Standard Specification for load bearing Concrete Masonry Units shall apply as required.
B. Size and Shape: Nominal modular size of 8 x 8 x 16 inches. Provide special units for 90-degree corners, bond beams, lintels and bullnosed corners.

2.2 REINFORCEMENT AND ANCHORAGE

A. Single Wythe Joint Reinforcement: Truss type; steel wire, hot dip galvanized to ASTM A641 Class 3 after fabrication, cold drawn steel wire conforming to ASTM A82, 3/16 inch side rods with 1/16 inch cross ties.
B. Wall Ties: bent steel shape, 1 x 6 inch size x 18 gauge thick, hot dip galvanized to ASTM A123 finish.

2.3 FLASHINGS

A. Galvanized Steel: ASTM A525, 24-gauge core steel.

2.4 ACCESSORIES

A. Preformed Control Joints: Rubber material. Provide with corner and tee accessories, heat fused joints.
B. Building Paper: No. 15 asphalt saturated felt.
C. Nailing Strips: Softwood, preservative treated for moisture resistance, dovetail shape, sized to masonry joints.
D. Weeps: Preformed plastic tubes, hollow.
E. Cleaning Solution: Non-acidic, not harmful to masonry work or adjacent materials.

2.5 SEALERS

A. Provide sealer to exterior concrete masonry units equal to Sure Klean; Blok-Guard S or Weather Seal Siloxane WB Concentrate as manufactured by: ProSoCo, Inc.

PART 3 EXECUTION

3.1 EXAMINATION

A. Verify that field conditions are acceptable and are ready to receive work.
B. Verify items provided by other sections of work are properly sized and located.
C. Verify that built-in items are in proper location and ready for roughing into masonry work.

3.2 PREPARATION

A. Direct and coordinate placement of metal anchors supplied to other sections.
B. Provide temporary bracing during installation of masonry work. Maintain in place until building structure provides permanent bracing.

3.3 COURSING

A. Establish lines, levels, and coursing indicated. Protect from displacement.
B. Maintain masonry courses to uniform dimension. Form vertical and horizontal joints of uniform thickness.
C. Concrete Masonry Units:
    1. Bond: Running.
    2. Coursing: One unit and one mortar joint to equal 8 inches.
    3. Mortar Joints: Beveled.

3.4 PLACING AND BONDING

A. Lay solid masonry units in full bed of mortar, with full head joints, uniformly jointed with other work.
B. Lay hollow masonry units with face shell bedding on head and bed joints.
C. Buttering corners of joints or excessive furrowing of mortar joints are not permitted.
D. Remove excess mortar as work progresses.
E. Do not shift or tap masonry units after mortar has achieved initial set. Where adjustment must be made, remove mortar and replace.
F. Perform job site cutting of masonry units with proper tools to provide straight, clean, unchipped

edges. Prevent broken masonry unit corners or edges.

3.5 CONTROL AND EXPANSION JOINTS

A Do not continue horizontal joint reinforcement through control and expansion joints.
B. Install preformed control joint device in continuous lengths. Seal butt and corner joints in accordance with manufacturer's instructions.
C. Size control joint in accordance with Section 07900 for sealant performance.
D. Form expansion joint as detailed.

3.6 TOLERANCES

A. Maximum Variation from Unit to Adjacent Unit: 1/16 inch.
B. Maximum Variation from Plane of Wall: 1/4 inch in 10 ft and 1/2 inch in 20 ft or more.
C. Maximum Variation from Plumb: 1/4 inch per story non-cumulative; 1/2 inch in two stories or more.
D. Maximum Variation from Level Coursing: 1/8 inch in 3 ft and 1/4 inch in 10 ft; 1/2 inch in 30 ft.
E. Maximum Variation of Joint Thickness: 1/8 inch in 3 ft.
F. Maximum Variation from Cross Sectional Thickness of Walls: 1/4 inch.

3.7 CUTTING AND FITTING

A. Cut and fit for chases, pipes, conduit, sleeves and grounds. Coordinate with other sections of work to provide correct size, shape and location.
B. Obtain approval prior to cutting or fitting masonry work not indicated or where appearance or strength of masonry work may be impaired.

3.8 FIELD QUALITY CONTROL

A. Field inspection will be performed under provisions of Section 01400.
B. Inspect all masonry work.

3.9 CLEANING

A. Clean work under provisions of 01700.
B. Remove excess mortar and mortar smears as work progresses.
C. Replace defective mortar. Match adjacent work.
D. Clean soiled surfaces with cleaning solution.
E. Use non-metallic tools in cleaning operations.

3.10 PROTECTION OF FINISHED WORK

A. Protect finished Work under provisions of Section 01500.
B. Without damaging completed work, provide protective boards at exposed external corners, which may be damaged by construction activities.

END OF SECTION

05500

METAL FABRICATIONS

PART 1 GENERAL

1.1 SECTION INCLUDES

A. Shop fabricated ferrous metal items.

1.2 RELATED SECTIONS

A. Section 09900 - Painting: Paint finish.
B. Section 03300 - Cast-In-Place Concrete: Placement of metal fabrications in concrete.
C. Section 04300 - Unit Masonry System: Placement of metal fabrications in masonry.

1.3 REFERENCES

A. ASTM A36 - Structural Steel.
B. ASTM A53 - Hot-Dipped, Zinc-coated Welded and Seamless Steel Pipe.
C. ASTM A123 - Zinc (Hot-Dip Galvanized) Coatings on Iron and Steel Products.
D. ASTM A283 - Carbon Steel Plates, Shapes and Bars.
E ASTM A307 - Carbon Steel Bolts and Studs, 60,000 p.s.i Tensile Strength.
F. ASTM A500 - Cold-Formed Welded and Seamless Carbon Steel Structural Tubing in Round and Shapes.
G. ASTM A501 - Hot-Formed Welded and Seamless Carbon Steel Structural Tubing.
H. AWS A2.0 - Standard Welding Symbols.
I. AWS D1.1 - Structural Welding Code.
J. SSPC (Steel Structures Painting Council) - Steel Structures Painting Manual.

PART 2 PRODUCTS

2.1 MATERIALS - STEEL

A. Steel Sections: ASTM A36.
B. Steel Tubing: ASTM A500, Grade B.
C. Plates: ASTM A283.
D. Pipe: ASTM A53, Grade B, Schedule 40.
E. Bolts, Nuts, and Washers: ASTM A325 galvanized to ASTM A153 for galvanized components.
F. Welding Materials: AWS D1.1; type required for materials being welded.
G. Ladders: ANSI A14.3.
H. Shop and Touch-Up Primer: SSPC 15, Type 1, red oxide.

2.2 FABRICATION

A. Fit and shop assemble items in largest practical sections, for delivery to site.
B. Fabricate items with joints tightly fitted and secured.
C. Grind exposed joints flush and smooth with adjacent finish surface. Make exposed joints butt tight, flush and hairline. Ease exposed edges to small uniform radius.
D. Exposed Mechanical Fastenings: Flush countersunk screws or bolts; unobtrusively located; consistent with design of component, except where specifically noted otherwise.
E. Supply components required for anchorage of fabrications. Fabricate anchors and related components of same material and finish as fabrication, except where specifically noted otherwise.

2.3 FABRICATION TOLERANCES

A. Squareness: 1/8-inch maximum difference in diagonal measurements.
B. Maximum Offset Between Faces: 1/16 inch.
C. Maximum Misalignment of Adjacent Members: 1/16 inch.
D. Maximum Bow: 1/8 inch in 48 inches.
E. Maximum Deviation: from plane: 1/16 inch in 48 inches.

2.4 FINISHES - STEEL

A. Clean surfaces of rust, scale, grease, and foreign matter prior to finishing.
B. Do not prime surfaces in direct contact with concrete or where field welding is required.
C. Prime paint items with one coat.
D. Structural Steel Members: Galvanize after fabrication to ASTM A123. [Provide minimum 1.25 oz/sq ft galvanized coating.]
E. Non-structural Items: Galvanized after fabrication to ASTM A123. Provide minimum 1.25 oz/sq ft galvanized coating.
F. Chrome Plating: ASTM B177, weight, nickel-chromium alloy, satin finish.

PART 3 EXECUTION

3.1 EXAMINATION

A. Verify that field conditions are acceptable and are ready to receive work.

3.2 PREPARATION

A. Clean and strip primed steel items to bare metal where site welding is required.
B. Supply steel items required to be cast into concrete or embedded in masonry with setting templates to appropriate sections.

3.3 INSTALLATION

A. Install items plumb and level, accurately fitted, free from distortion or defects.
B. Provide for erection loads, and for sufficient temporary bracing to maintain true alignment until completion of erection and installation of permanent attachments.
C. Field weld components indicated on Drawings.
D. Perform field welding in accordance with AWS D1.1.
E. Obtain approval prior to site cutting or making adjustments not scheduled.
F. After erection, prime welds, abrasions, and surfaces not shop primed or galvanized, except surfaces to be in contact with concrete.

3.4 ERECTION TOLERANCES

A. Maximum Variation from Plumb: 1/4 inch per story, non-cumulative.
B. Maximum Offset from True Alignment: 1/4 inch.
C. Maximum Out-of-Position: 1/4 inch.

END OF SECTION

05531

GRATINGS AND FLOOR PLATES

PART 1 GENERAL

1.1 SECTION INCLUDES

A. Pit drain grating.

1.2 RELATED SECTIONS

A. Section 03100: Framed concrete opening.
B. Section 05500 - Metal Fabrications.
C. Section 09900 - Painting: Field paint finish.
D. Section 03100: Placement of grating frames in concrete.

1.3 REFERENCES

A. ASTM A36/A36M - Structural Steel.
B. ASTM A123 - Zinc (Hot Galvanized) Coatings on Fabricated from Rolled, Pressed and Forged Steel Shapes, Plates, Bars and Strip.
C. ASTM A510 - Wire Rods and Coarse Round Wire, Carbon Steel.
D. ASTM A525 - Steel Sheet, Zinc-coated (Galvanized) by the Hot-Dip Process.
E. ASTM A569/A569M - Steel, Carbon (0.15 Maximum Percent), Hot-Rolled Sheet and Strip Commercial Quality.
F. AWS D1.1 - Structural Welding Code.
G. AWS A2.0 - Standard Welding Symbols.
H. NAAMM A202.1 - Metal Bar Grating Manual.
I. SSPC - Steel Structures Painting Council: Steel Structures Painting Manual.

1.4 PERFORMANCE REQUIREMENTS

A. Conform to BOCA code for applicable loads.
B. Maximum spacing between bars: To restrict pedestrian shoe heels.3/8 inch.

1.5 SUBMITTALS FOR REVIEW

A. Section 01300 - Submittals: Procedures for submittals.
B. Shop Drawings: Indicate details of gratings, plates, component supports, anchorage, openings and perimeter construction details.
C. Indicate welded connections using standard AWS A2.0 welding symbols. Indicate net weld lengths.

1.6 PROJECT CONDITIONS

A. Section 01039 - Coordination and Meetings.
B. Coordinate the Work with placement of frames, tolerances for placed frames and openings.

PART 2 PRODUCTS

2.1 MATERIALS

A. Sheet Steel for Die Stamping: ASTM A525; with raised lug pattern.

B. Cross Bars: ASTM A510.
C. Welding Materials: AWS D1.1, type required for materials being welded.
D. Shop and Touch-Up Primer: SSPC 15, Type 1, red oxide.

2.2 ACCESSORIES

A. Fasteners and Saddle Clips: Flange Blocks: J-Hooks: Galvanized steel.
B. Perimeter Closure: Of same material as grating.
C. Edge Banding: At edges and at intermediate panel edges.

2.3 FABRICATION

A. Fabricate grates and plates to accommodate design loads.
B. Mechanically clinch joints of intersecting metal sections.
C. Fabricate support framing for openings.

2.4 FINISHES

A. Clean surfaces of rust, scale, grease and foreign matter prior to finishing.
B. Do not prime surfaces in direct contact with concrete or where field welding is required.
C. Prime paint items with one coat.

PART 3 EXECUTION

3.1 EXAMINATION

A. Section 01039 - Coordination and Meetings: Verification of existing conditions before starting work.
B. Verify that opening sizes and dimensional tolerances are acceptable.
C. Verify that supports and anchors are correctly positioned.

3.2 INSTALLATION

A. Place frames in correct position, plumb and level.
B. Mechanically cut galvanized finish surfaces. Do not flame cut.
C. Anchor by welding to saddle clips or bolting to flange blocks.
D. Set perimeter closure flush with top of grating and surrounding construction.
E. Secure to prevent movement.

3.3 TOLERANCES

A. Conform to NAAMM A202.1.

3.4 CLEANING

A. Clean welds and damaged coatings and apply one coats of touch-up primer.

END OF SECTION

06112

FRAMING AND SHEATHING

PART 1 GENERAL

1.1 SECTION INCLUDES

A. Roof framing.
B. Built-up structural beams and columns.
C. Diaphragm trusses fabricated on site.
D. Floor, wall and roof sheathing.
E. Sill flashings.
F. Preservative treatment of wood.
G. Fire retardant treatment of wood.
H. Miscellaneous framing and sheathing.
I. Telephone and electrical panel back boards.
J. Concealed wood blocking for support of toilet and bath accessories, wall cabinets and wood trim.

1.2 RELATED SECTIONS

A. Section 04300: Setting anchors in concrete or masonry.
B. Section 05500: Prefabricated steel structural supports.

1.3 REFERENCES

A. AHA (American Hardboard Association) A135.4 - Basic Hardboard.
B. ALSC (American Lumber Standards Committee) - Softwood Lumber Standards.
C. ANSI A208.1 - Mat-Formed Wood Particleboard.
D. APA (American Plywood Association).
E. NFPA (National Forest Products Association).
F. SPIB (Southern Pine Inspection Bureau).
G. WCLIB (West Coast Lumber Inspection Bureau).
H. WWPA (Western Wood Products Association).

1.4 SUBMITTALS FOR REVIEW

A. Shop Drawings for Site Fabricated Truss Frame: Indicate dimensions, wood species and grades, component profiles, drilled holes, fasteners, connectors, erection details and sequence.

1.5 QUALITY ASSURANCE

A. In lieu of grade stamping exposed to view lumber and plywood, submit manufacturer's certificate certifying that products meet or exceed specified requirements.
B. Design structural shop fabricated trusses under direct supervision of a Professional Structural Engineer experienced in design of this Work and licensed in the State of Missouri.

1.6 DELIVERY, STORAGE AND PROTECTION

A. Section 01600 - Material and Equipment: Transport, handle, store and protect products.
B. Protect trusses from warping or other distortion by stacking in vertical position, braced to resist movement.

PART 2 PRODUCTS

2.1 2x MATERIALS

A. #2 or better.

2.2 ACCESSORIES

A. Fasteners and Anchors:
   1. Fasteners: Hot dipped galvanized steel for high humidity and treated wood locations, unfinished steel elsewhere.

PART 3 EXECUTION

3.1 FRAMING

A. Set structural members level and plumb, in correct position.
B. Make provisions for erection loads and for sufficient temporary bracing to maintain structure safe, plumb and in true alignment until completion of erection and installation of permanent bracing.
C. Place horizontal members, crown side up.
D. Construct load bearing framing members' full length without splices.
E. Double members at openings over 24 inches wide. Space short studs over and under opening to stud spacing.
F. Construct double joist headers at floor and ceiling openings and under wall stud partitions that are parallel to floor joists. Framed rigidly into joists.
G. Bridge joists or other framing in excess of 8 feet span at mid-span. Fit solid blocking at ends of members.
H. Place full width continuous sill flashings under framed walls on cementitious foundations. Lap flashing joint 4 inches.
I. Coordinate installation of wood decking, wood chord metal joists, glue laminated structural units, prefabricated wood trusses or plywood web joists.

3.2 TOLERANCES

A. Framing Members: 1/4 inch from true position, maximum.
B. Surface Flatness of Floor: 1/4 inch in 10 feet maximum and 1/2 inch in 30 feet maximum.

END OF SECTION

07210

BUILDING INSULATION

PART 1 GENERAL

1.1 SUMMARY

A. Provide building insulation where shown on the Drawings, as specified herein and as needed for a complete and proper installation.

B. Related work:

1. Documents affecting work of this Section include but are not necessarily limited to, General Conditions, Supplementary Conditions and Sections in Division 1 of these Specifications.

1.2 QUALITY ASSURANCE

A. Use adequate numbers of skilled workmen who are thoroughly trained and experienced in the necessary crafts and who are completely familiar with the specified requirements and the methods needed for proper performance of the work of this Section.

B. Upon completion of this portion of the Work, complete and post a certificate of insulation compliance in accordance with pertinent requirements of governmental agencies having jurisdiction.

1.3 DELIVERY, STORAGE AND HANDLING

A. Comply with pertinent provisions of Section 01620.

PART 2 PRODUCTS

2.1 MATERIALS

A. Provide the following building insulation where shown on the Drawings or otherwise needed to achieve the degree of insulation required under pertinent regulations of governmental agencies having jurisdiction.

1. Roof Insulation – 9-1/2” thick, R-30, unfaced glass fiber thermal batt insulation. The first layer lain between the bottom chords of the trusses, the second layer laid perpendicular across the top of the truss bottom chord. Equal to Owens-Corning Fiberglass Corporation, Toledo, Ohio 43659.

2.2 OTHER MATERIALS

A. Provide other materials, not specifically described but required for a complete and proper installation, as selected by the Contractor subject to the approval of the Architect.

PART 3 EXECUTION

3.1 SURFACE CONDITIONS

A. Examine the areas and conditions under which work of this Section will be performed. Correct conditions detrimental to timely and proper completion of the Work. Do not proceed until unsatisfactory conditions are corrected.

B. Remove, or protect against, projections in construction framing that may damage or prevent proper insulation.

3.2 INSTALLATION

A. Install the work of this Section in strict accordance with the original design, requirements of governmental agencies having jurisdiction, and the manufacturer's recommended installation procedures as approved by the Architect, anchoring all components firmly into position.

END OF SECTION

07465

ALUMINUM SOFFIT PANELS

PART 1 GENERAL

1.1 SECTION INCLUDES

A. Preformed aluminum soffit panels, trim, and accessories for enclosing exterior roof overhangs.

1.2 RELATED SECTIONS

A. Section 05500 – Metal Fabrications.
B. Section 06112 – Framing and Sheathing.
C. Section 07900 – Joint Sealers.

1.3 REFERENCES

A. AAMA 1402-86 – Aluminum Siding, Soffit, and Fascia.
B. ASTM B 209 – Aluminum and Aluminum-Alloy Sheet and Plate.
C. ASTM D 226 – Asphalt-Saturated Organic Felt Used in Roofing and Waterproofing.
D. ASTM E 84 – Surface Burning Characteristics of Building Materials.

1.4 PERFORMANCE REQUIREMENTS

A. Soffits shall be fabricated and installed to withstand positive and negative wind pressure loads in accordance with applicable codes.
B. Soffit system to accommodate without damage to components or failure of weather barrier movement caused by seasonal temperature cycling and deflection of structural support framing.
C. Moisture entering or condensation occurring within soffit system shall drain to exterior.

1.5 SUBMITTALS

A. Provide in accordance with Section 01300:
   1. Product data including material descriptions, dimensions, and profiles.
   2. Shop drawings showing layout, location of vents, dimensions, penetrations, trim, and installation methods.
   3. 4 inch long minimum samples of soffit panel and trim in color selected.
   4. Certificates documenting soffit system complies with requirements specified.
   5. Manufacturer's installation instructions.
   6. Copy of warranty for review by Architect.

1.6 QUALITY ASSURANCE

A. Manufacturer: Company with a minimum 5 years' successful experience manufacturing aluminum soffit.
B. Single Source Responsibility: To ensure functional and appearance compatibility, soffit panels and all trim pieces shall be products of single manufacturer.
C. Aluminum soffit system shall be fabricated and installed to comply with:
   1. AAMA 1402-86.
   2. International Code Council-ES Legacy – Report No. 97-64.
   3. International Conference of Building Officials (ICBO): Report No. 2027.

1.7 PRODUCT HANDLING

A. Deliver components in manufacturer's protective cartons clearly labeled as to specific products contained.
B. During delivery and storage keep cartons flat and supported along entire length.
C. Store material off ground, out of weather, in dry place. Provide ventilation. Protect from falling objects and construction activities.
D. Handling: Avoid gouging, scratching, and denting.

1.8 WARRANTY

A. Provide under provisions of section 01780 – Closeout Submittals: Fifty (50) year lifetime limited, non-prorated, transferable warranty.

PART 2 PRODUCTS

2.1 MATERIALS

A. Fabricate soffit panels and trim from sheet aluminum complying with ASTM B 209, AA3000 Alloy:
B. Minimum Aluminum Properties:
1. Ultimate Strength: 25 KSI.
2. Yield Strength: 22 KSI.
3. Modulus of Elasticity: 10,000 KSI.
4. Coefficient of Linear Thermal Expansion: 1.31 x 10(-5) inch/inch/degree F.
5. Melting Range: 1175 to 1210 degrees F.

2.2 SOFFIT PANELS

A. Type: Fully vented, hi-tensile, double V-groove soffit panel with installation flanges along both edges.
1. Dimensions: 12 inches exposed width by 144 inches long.
2. Thickness: 0.016 inches.
3. Profile: V-grooves forming three (3) 4-inch wide panels with all panels vented.
4. Net Free Open Area: 11.6 square inches per linear foot.
5. Surface: Smooth.
6. Finish Color: White.

2.3 TRIM

A. Provide trim pieces as detailed on manufacturer's installation manual and as required for complete, weathertight, functional installation.
B. Aluminum Trim: Fabricate from same material as soffit to shape, dimensions, and profile required to accommodate soffit panel and project conditions. Provide with channels to receive panels, flanges for concealed weathertight attachment, and slotted attachment holes. Color shall match or coordinate with soffit color. In order to eliminate or minimize visible joints, form in longest possible lengths with 10 feet being the minimum.
1. J-channel: ½ inch wide channel to receive soffit panels with ½ inch attachment flange.
2. Reverse Frieze Molding: F-shaped piece with ½ inch wide channel to receive aluminum soffit panels.
3. Soffit T-Bar: Double channel to receive two soffit panels with exposed face.

2.4 ACCESSORIES

A. Fasteners: Weather and corrosion resistant nails of type, size, and spacing as recommended by soffit manufacturer.
   1. Plain Shank Nails: Use for wood studs, furring, and other framing with minimum lengths of 1-1/2 inches. Allow ¾ inch minimum penetration into wood framing.
   2. Screw Shank Nails: Use for plywood sheathing.
   3. Exposed Nails: Trim nails that match soffit and trim.
B. Sealants: Silicone type as recommended by soffit manufacturer.

PART 3 EXECUTION

3.1 GENERAL

A. Prepare substrate and install soffit in accordance with manufacturer's instructions, approved shop drawings, and manufacturer's soffit installation manual.
B. Coordinate work with provisions and installation of exterior insulation finish system to ensure compatibility and weathertight, neat transition from vertical surface to horizontal soffit panels.

3.2 PREPARATION

A. Inspection: Verify that soffit support framing is rigid, level, and spacing does not exceed 24 inches. Do not proceed until deficiencies are addressed.

3.3 INSTALLATION

A. Field Cutting: Accurately measure and cut soffit panels and trim. Use power circular saw with 10-point aluminum cutting blade, duckbill sheet metal snips, or hacksaw as recommended by manufacturer for specific cutting operation.
B. Trim: Prior to installing soffit panels, locate and anchor perimeter to receive channels.
C. Soffit Panels:
   1. Layout panels as detailed on approved shop drawings. Provide vented panels to provide sufficient ventilation of space above soffit.
   2. Insert panel into receiver channel, flex panel, and insert other end into opposing receiver channel. Ensure panels are perpendicular to perimeter and aligned. Fasten panel to supports by nailing through attachment flanges.
   3. Oerlap, engage, and lock subsequent panels over preceding ones.
   4. At corners, miter cut soffit panels and install with soffit T-bar. Align joints and grooves of intersecting panels.
D. Expansion Joints: Where soffit panel engages receiver channel and where aluminum components butt or adjoin other materials, leave expansion gap:
   1. Hot weather with aluminum components partially expanded: 1/16 inch.
   2. Cold weather with aluminum components partially contracted: 1/8 inch.
E. Fastening: Install panels and trim with nails. Where exposed, use trim nails with color to match aluminum components.
   1. Drive fasteners straight and level. Do not slant fasteners.
   2. Do not drive head of fastener tightly against attachment flange. Allow 1/32 inch clearance between fastener head and aluminum surface.
   3. Do not place fastener through face of soffit panel.
   4. Spacing: Fasten soffit panels at 24 inches maximum.
E. Sealants: Apply sealants where indicated on manufacturer's approved shop drawings and as required to provide weathertight installation. Depth of sealant bead shall be ¼ inch minimum.

3.4 CLEANING AND PROTECTION

A. Clean aluminum soffits and trim. Use detergent as required. Do not use solvents, abrasive, wire brushes, or steel scrapers.
B. Remove Excess materials and debris from site.
C. Protect soffit from subsequent construction operations. If damage occurs, remove and replace damaged components to provide installation in original, undamaged condition.

END OF SECTION

07600

FLASHING AND SHEET METAL

PART 1 GENERAL

1.1 SECTION INCLUDES

A. Metal Roof Flashing and Trim

1.2 RELATED SECTIONS

A. Section 07900 - Sealants

1.3 REFERENCES

A. ASTM A 526 – Standard Specification for Steel Sheet, Zinc-Coated (Galvanized) by the Hot-Dip Process, Commercial Quality.
B. ASTM A 527 – Specification for Steel Sheet, Zinc-Coated (Galvanized) by the Hot-Dip Process, Lock-Forming Quality.
C. ASTM B 209 – Standard Specification for Aluminum and Aluminum-Alloy Sheet and Plate.
D. National Roofing Contractors Association (NRCA) – "Roofing and Waterproofing Manual" third edition.
E. Sheet Metal and Air Conditioning Contractor's National Association (SMACNA) – Architectural Sheet Metal Manual.

1.4 SUBMITTALS

A. Submit under provisions of Section 01300.
B. Manufacturer's data sheets on each product to be used, including:
   1. Preparation instructions and recommendations.
   2. Storage and handling requirements and recommendations.
   3. Installation method.
C. Shop Drawings:
   1. Indicate material profile, dimensions, jointing pattern, jointing details, fastening methods, flashing, termination, and installation details.
   2. Show the layout of wall sections, attachment, joint details, trim flashing, accessories and air infiltration seals.
   3. Show thickness of treated wood nailers and substrate.
D. Design Data:
   1. Submit manufacturer's certification that product supplied meets Factory Mutual Research Corporation's (FMRC) requirements for Roof Perimeter Flashing for use in Zone 1 and Zone 2 Windstorm Resistance Areas as defined in FME & R Loss Prevention Data Sheet 1-7 and 1-49 design recommendations, and meets the wind resistance requirements specified.
   2. Certify that perimeter metal edge systems furnished meet the specified design pressures as tested using ANSI/SPRI ES-1-98 test method RE-2 or RE-3 test methodology.
   3. Certify that membrane attachment by perimeter edge systems exceeds 100 lb/ft of force as tested by ANSI/SPRI ES-1-98 test method RE-1.
E. Verification Samples: For each finish product specified, two samples, minimum size 6 inches square, representing actual product, color, and pattern.

1.5 QUALITY ASSURANCE

A. Installer qualifications: Companies specializing in sheet metal work with 5 years documented

experience.

1.6 DELIVERY, STORAGE, AND HANDLING

A. Store products in manufacturer's unopened packaging until ready for installation.
B. Store and dispose of solvent-based materials, and materials used with solvent-based materials, in accordance with requirements of local authorities having jurisdiction.
C. Materials shall be delivered with identification labels, warnings and storage recommendations.
D. Materials shall be stored in a clean, dry location prior to installation to prevent any damage to the contents. Store materials off the ground and protect from damage and deterioration as required by the material manufacturer.
E. Handle materials to prevent damage to their surfaces, edges and ends of metal items. Damaged material shall be rejected and immediately removed from the site.

1.7 PROJECT CONDITIONS

A. Maintain environmental conditions (temperature, humidity, and ventilation) within limits recommended by manufacturer for optimum results. Do not install products under environmental conditions outside manufacturer's absolute limits.

1.8 WARRANTY

A. Warranty Certification: Installing contractor shall certify that sheet metal work has been installed per National Sheet Metal System's printed details and specifications.
B. Manufacturer warrants sheet metal fabrications are warranted to be free of defects in material and workmanship for a period of five (5) years from date of shipment.
C. Provide manufacturer's Twenty (20) year finish warranty for standard coil-coated Kynar 500 colors against peeling, chalking, fading, checking and crazing, commencing upon date of final completion.
D. No other warranties either expressed or implied are acceptable unless so stated in writing.

PART 2 PRODUCTS

2.1 MANUFACTURERS

A. Acceptable Manufacturer: McElory Metal, PO Box 1148, Shreveport, LA 71163, Toll free 800-950-6532.
B. Other manufacturer's as approved by the Architect.

2.2 ROOF EDGE SYSTEMS

A. Provide flashing system which meets the criteria recommended by Factory Mutual Research Corporation's (FRMC) requirements for Roof Perimeter Flashing for use in Zone 1 and Zone 2 Windstorm Resistance Areas as defined in FME & R Loss Prevention Data Sheet 1-7 and 1-49.
B. Accessories:
   1. Closure Cleat.
   2. Custom Fabrications as shown on details.
C. Accessories to be Fabricated from:
   1. 26 ga. Sheet Steel minimum.
D. Finish:
   1. Kynar 500/Hylar 5000 from manufacturer's standard coil-coated colors.
      a. Color – As determined by District representative.

2.3 METAL ROOF FLASHING & TRIM

A. Profile: As indicated on Roof Manufacturer's standard details.
   1. Pitch Break.
   2. Valley Flashing.
   3. Peak Flashing.
   4. Ridge/Hip Flashing.
   5. Eave Flashing.
   6. Outside Corner Flashing.
   7. Inside Corner Flashing.
   8. Material and Finish: 26 ga. Steel galvanneal/paint grip.

B. Steel Finish:
   1. Prefinished steel with Kynar 500/Hylar 5000 from manufacturer's standard colors.

2.4 MATERIALS

A. Prefinished Zinc-Coated Steel: Hot-dip galvanized steel, commercial quality A1 S1 G90 extra smooth, primed on both sides and finished on 1 side with 70 percent Kynar 500 based fluorocarbon coating of minimum 0.70 mils total dry film thickness.
   1. Strippable coating: Shop-applied liquid to front side of pre-finished metal to protect finish during fabrication, shipment, and field handling.

B. Prefinished Aluminum Sheet: ASTM B 209, alloy 3003, coil-coated, 70 percent Kynar based fluorocarbon coating of minimum 0.70 mils total dry film thickness.

2.5 FABRICATION

A. General Metal Fabrication: Shop-fabricate work to the greatest extent possible. Comply with details indicated on Drawings, and with applicable requirements of SMACNA. Fabricate for waterproof and weather-resistant performance; with expansion provisions for running work. Form work to fit substrates. Comply with material manufacturer instructions and recommendations for forming material. Form exposed sheet metal work without excessive oil-canning, buckling, and tool marks, true to line and levels indicated, with exposed edges folded back to form hems.

B. Seams: Fabricate non-moving seams in sheet metal with flat-lock seams. Form seams and solder tin edges to be seamed.

C. Expansion and Contraction:
   1. Provide for thermal expansion and contraction, and building movement in completed work, without over-stressing the material, breaking connections, or producing wrinkles and distortion in finished surfaces. Make watertight and weather-resistive.
   2. Where subject to thermal expansion and contraction, attach members with clips to permit movement without damage, or provide slotted or oversize holes with washers only, as acceptable to Architect.
   3. Make lock seam work flat and true to line, and sweat full of solder, except where installed to permit expansion and contraction.
      a. Lap flat lock seams and soldered lap seams according to pitch, but in no case less than 3 inches. Make seams in direction of flow.

D. Sealant Joints: Where movable, non-expansion type joints are indicated, or required for proper performance of work, form metal to provide for proper installation of sealant per SMACNA standards.

E. Metal Separation: Separate metal from non-compatible metal or corrosive substrates by coating concealed surfaces at locations of contact with bituminous coatings or other permanent separation as recommended by manufacturer.

F. Accessories:
   1. Factory assemblies shall be furnished to maintain watertight integrity.
   2. Provide matching accessories or other special fabrications from the manufacturer; color to match specified profile unless noted otherwise.

G. Fascia/flashing sections furnished with strippable protective vinyl masking shall have film

removed immediately before installation to prevent damage to the coating if left exposed to the ultra-violet rays of sunlight.

PART 3 EXECUTION

3.1 EXAMINATION

A. Do not begin installation until substrates have been properly prepared.
B. If substrate preparation is the responsibility of another installer, notify Architect of unsatisfactory preparation before proceeding.

3.2 PREPARATION

A. Clean surfaces thoroughly prior to installation.
B. Prepare surfaces using the methods recommended by the manufacturer for achieving the best result for the substrate under the project conditions.

3.3 INSTALLATION

A. Install in accordance with manufacturer's instructions.
B. Except as otherwise indicated, comply with SMACNA recommendations.
C. Anchor units of work securely in place by methods indicated, providing for thermal expansion of metal units. Conceal fasteners wherever possible, and set units true to line and level. Install work with laps, joints, and seams that will be permanently watertight and weather-restive.
D. Strictly follow the material manufacturer's printed installation requirements.
E. Completed work shall be true to line without buckling, creasing, warp or wind in finished surfaces. "Oil-canning" surfaces are not acceptable.
F. Isolate dissimilar metals, masonry or concrete from metals using bituminous paint, tape or slip-sheet. Use gasketed fasteners where required to prevent corrosive actions.
G. Allow sufficient clearances for expansion and contraction of linear metal components. Secure metal using continuous cleats, clips and fasteners as required by the system. No exposed face fastening shall be accepted.

3.4 PROTECTION

A. Protect installed products until completion of project.
B. Maintain prefinished surfaces in undamaged condition until date of final completion. Repair or replace damaged components, any touch-up to be indistinguishable from undamaged surface/finish.
C. Upon completion of work, a final inspection by the owner's representative shall be made. Any necessary corrective actions will be noted and the installing contractor shall make corrections within five (5) working days. Upon acceptance of the project, any applicable warranties shall be presented to the owner's representative.

END OF SECTION

07612

SHEET METAL ROOFING

PART 1 GENERAL

1.1 SECTION INCLUDES

A. Pre-finished steel sheet roofing, associated flashings.
B. Counter flashings.
C. Snow guards.

1.2 RELATED SECTIONS

A. Section 07900 - Joint Sealers.

1.3 REFERENCES

A. AAMA 603.8 - Voluntary Performance Requirements and Test Procedures for Pigmented Organic Coatings on Extruded Aluminum.
B. AAMA 605.2 - Specification for High Performance Organic Coatings on Architectural Extrusions and Panels.
C. ASTM A526/A526M - Standard Specification for Steel Sheet, Zinc Coated (Galvanized) by the Hot-Dip Process, Commercial Quality.

1.4 SUBMITTALS FOR REVIEW

A. Section 01300 - Submittals: Procedures for submittals.
B. Shop Drawings: Indicate material profile, jointing pattern, jointing details, fastening methods, flashings, terminations and installation details.
C. Product Data: Provide data on metal types, finishes and characteristics.

1.5 QUALITY ASSURANCE

A. Perform work in accordance with SMACNA Architectural Sheet Metal Manual requirements, except as otherwise noted.
B. Fabricator and Installer Qualifications: Company specializing in sheet metal roof installations with minimum four years experience.

1.6 DELIVERY, STORAGE, AND PROTECTION

A. Section 01600 - Material and Equipment: Transport, handle, store, and protect.
B. Stack material to prevent twisting, bending or abrasion and to provide ventilation. Slope metal sheets to ensure drainage.
C. Prevent contact with materials that may cause discoloration or staining.

1.7 WARRANTY

A. Section 01700 - Contract Closeout. 01740 - Warranties.

PART 2 PRODUCTS

2.1 METAL WALL AND ROOF PANELS

A. Manufacturer: McElroy Metal, Inc.

1. Contact: 1500 Hamilton Road, Bossier City, LA 71111; Telephone (800) 950-6531, (318) 747-8000; Fax (318) 747-8059; Email marketing@mcelroymetal.com; website www.mcelroymetal.com
2. Proprietary products: McElroy Preformed Roof Panels.

B. Or Equal.

2.2 MANUFACTURED UNITS

A. McElroy Max-Rib Panel
1. Profile: Major longitudinal ribs 3/4" (45 mm) deep, spaced 9" (229 mm) on center; minor longitudinal ribs centered between major ribs.
2. Size: 36" (914 mm) cover width.
3. Material Galvalume steel sheet conforming to ASTM A792, AZ55 coating; 26 gauge sheet thickness.
4. Finish: Galvalume Substrate with Kynar 500 coating.
   a. Color: Selected from full range of manufacturer's standard colors.

B. Trim:
1. Manufacturer's standard 26 gauge sheet metal matching panel material and finish, break-formed, to profiles indicated on drawings, and including, but not limited to:
   a. Copings.
   b. Gravel stops.
   c. Gutters and downspouts.
   d. Termination and transition strips.
2. Color: Match panel finish.
3. Color: Selected from full range of manufacturer's standard color.

C. Clips and Fasteners: Supply items required for installation of panels in accordance with manufacturer's installation instructions and other indicated items; supply galvanized clips and fasteners.

2.3 ACCESSORIES

A. Fasteners: The steel panels shall be fastened to building framing by plated steel sharp point screws with zinc/.aluminum/cast nonferrous alloy hex washer heads pre-assembled with aluminum bond seal washers, which cannot red rust and are compatible with steel panel. Woodzac by Construction Fasteners, Inc., or equal are acceptable.

B. Snow Guards:
1. Design Requirements: Continuous linear roof snow retention system along front of building should have a minimum performance of 500# per lineal foot of bar without deflection. Connection must be used at every roof seam.
2. Bar: 16 ga. galvanized steel with Kynar 500 finish. Snow guard bar color to match metal roof or as selected by Architect.
3. Connection: Stainless steel U- Bracket with stainless steel screws.
4. Substrate Below Roof Panel: 2-Ply purlin at eave attachment line or double stagger line.
5. Quality Assurance: 5-years

C. Warranty:
1. Max Rib Steel Panels:
   a. 30 years against crack, peel, blister, or flake of paint coating
   b. 40 years against Chalk in excess of 8 per ASTM D-4214 Method D659
   c. 40 years against change of color in excess of 5 per ASTM D-2244

D. Trim and Flashing: 0.0158" minimum thickness steel on gables, ridge, corners, base with same

prefinished paint, Kynar 500. Color selected from standard color samples.

E. Closure Strips: 1” wide closed-cell linked expanded polyurethane, to match panel corrugation.

2.4 FABRICATION

A. Form sections true to shape, accurate in size, square and free from distortion or defects.
B. Fabricate cleats of same material as sheet, minimum 3” wide, interlockable with sheet.
C. Fabricate starter strips of same material as sheet, intermittent to minimum 3 inches wide, interlockable with sheet.
D. Form pieces in longest practical lengths.
E. Hem exposed edges on underside ½”, miter and seam corners.
F. Form material with standing seams, except where otherwise indicated. At moving joints, use sealed lapped, bayonet-type or interlocking hooked seams.
G. Fabricate corners from one piece with minimum 18 inch long legs; seam for rigidity, seal with sealant.
H. Fabricate vertical faces with bottom edge formed outward 1/4 inch and hemmed to form drip.
I. Fabricate flashings to allow toe to extend 2 inches over roofing. Return and brake edges.
J. Fabricate snow guards in accordance with SMACNA Plate.

PART 3 EXECUTION

3.1 EXAMINATION

A. Inspect roof deck to verify deck is clean and smooth, free of depressions, waves or projections, properly sloped to drains, valleys and/or eaves.
B. Verify deck is dry and free of snow or ice.
C. Verify correct placement of wood nailers [and insulation positioning between nailers].
D. Verify roof openings, curbs, pipes, sleeves, ducts or vents through roof are solidly set; reglets are in place and nailing strips located.
E. Verify roofing termination and base flashings are in place, sealed, and secure.

3.2 PREPARATION

A. Install starter and edge strips, and cleats before starting installation.
B. Install surface mounted reglets true to lines and levels. Seal top of reglets with sealant.
C. Back paint concealed metal surfaces and surfaces in contact with dissimilar metals with protective backing paint to a minimum dry film thickness of 15 mils.

3.3 INSTALLATION - FLASHINGS

A. Conform to SMACNA details.
B. Secure flashings in place using concealed fasteners. Use exposed fasteners only where permitted.
C. Cleat and seam all joints.
D. Apply plastic cement compound between metal flashings and felt flashings.
E. Fit flashings tight in place. Make corners square with surfaces true and straight in planes and lines accurate to profiles.
F. Seal metal joints watertight.

3.4 PROTECTION OF FINISHED WORK

A. Section 01700 - Contract Closeout: Protecting installed work.
B. Do not permit traffic over unprotected roof surface.

END OF SECTION

07631

GUTTERS AND DOWNSPOUTS

PART 1 GENERAL

1.1 SECTION INCLUDES

A. Pre-finished continuous aluminum gutters and downspouts.
B. Precast concrete splash pads.

1.2 RELATED SECTIONS

A. Section 09900 - Painting: Field painting of metal surfaces.

1.3 REFERENCES

A. ASTM B209 - Standard Specification for Aluminum and Aluminum-Alloy Sheet and Plate.

1.4 DESIGN REQUIREMENTS

A. Conform to SMACNA Manual CDA Handbook for sizing components for rainfall intensity determined by a storm occurrence of 1 in 5 years.

1.5 SUBMITTALS FOR REVIEW

A. Section 01300 - Submittals: Procedures for submittals.
B. Shop Drawings: Indicate locations, configurations, jointing methods, fastening methods, locations and installation details.
C. Samples: Submit two samples, 12 inches long illustrating component design, finish, color and configuration.

1.6 DELIVERY, STORAGE, AND PROTECTION

A. Section 01600 - Material and Equipment: Transport, handle, store and protect.
B. Stack material to prevent twisting, bending or abrasion and to provide ventilation. Slope to drain.
C. Prevent contact with materials during storage that may cause discoloration, staining or damage.

1.7 PROJECT CONDITIONS

A. Section 01039 - Coordination and Meetings.
B. Coordinate the work with downspout discharge pipe inlet.

PART 2 PRODUCTS

2.1 MATERIALS

A. Pre-Finished Aluminum Sheet: ASTM B209; 0.032 inch thick; plain finish shop pre-coated with acrylic coating; color as selected from manufacturer's standard.

2.2 COMPONENTS

A. Gutters: SMACNA Square style profile.
B. Connectors: Furnish required connector pieces for PVC (Polyvinyl Chloride) components.
C. Anchors and Supports: Profiled to suit gutters and downspouts.

1. Anchoring Devices: Type recommended by fabricator.
2. Gutter Supports: Straps. Spikes and ferrules.
3. Downspout Supports: Straps.

D. Fasteners: Aluminum. Same material and finish as gutters and downspouts, with soft neoprene washers.

2.3 ACCESSORIES

A. Splash Pads: Precast concrete type, size and profiles indicated; minimum 3,000 p.s.i. at 28 days, with minimum 5 percent air entrainment.
B. Downspout Boots: Plastic.

2.4 FABRICATION

A. Form gutters and downspouts of profiles and size indicated.
B. Fabricate with required connection pieces.
C. Form sections square, true and accurate in size, in maximum possible lengths, free of distortion or defects detrimental to appearance or performance. Allow for expansion at joints.
D. Hem exposed edges of metal.
E. Fabricate gutter and downspout accessories; seal watertight.

2.5 FACTORY FINISHING

A. Modified silicone polyester coating: Baked enamel system conforming to AAMA 603.8.
B. Primer Coat: Finish concealed side of metal sheets with primer compatible with finish system, as recommended by finish system manufacturer.

PART 3 EXECUTION

3.1 EXAMINATION

A. Section 01039 - Coordination and Meetings: Verification of existing conditions before starting work.
B. Verify that contact surfaces are ready to receive work.

3.2 PREPARATION

A. Paint concealed metal surfaces and surfaces in contact with dissimilar metals with protective backing paint to a minimum dry film thickness of 15 mil.

3.3 INSTALLATION

A. Install gutters, downspouts and accessories in accordance with manufacturer's instructions.
B. Slope gutters 1/8 inch per foot
C. Connect downspouts to downspout boots or shoes at 8 inches above grade or into storm sewer system. Seal connection watertight.
D. Set splash pads under downspouts.

END OF SECTION

07900

JOINT SEALERS

PART 1 GENERAL

1.1 SECTION INCLUDES

A. Sealants and joint backing.
B. Precompressed foam sealers.
C. Hollow gaskets.

1.2 RELATED SECTIONS

N/A

1.3 REFERENCES

A. ASTM C834 - Standard Specification for Latex Sealing Compounds.
B. ASTM C920 - Standard Specification for Elastomeric Joint Sealants.
C. ASTM C1193 - Standard Guide for Use of Joint Sealants.
D. ASTM D1056 - Standard Specification for Flexible Cellular Materials - Sponge or Expanded Rubber.
E. ASTM D1565 - Standard Specification for Flexible Cellular Materials -Vinyl Chloride Polymers and Copolymers (Open-Cell Foam).
F. ASTM D1667 - Standard Specification for Flexible Cellular Materials -Vinyl Chloride Polymers and Copolymers (Closed-Cell Foam).

1.4 QUALITY ASSURANCE

A. Manufacturer Qualifications: Company specializing in manufacturing the Products specified in this section with minimum three years experience.
B. Applicator Qualifications: Company specializing in performing the work of this section and approved by manufacturer.

1.5 ENVIRONMENTAL REQUIREMENTS

A. Maintain temperature and humidity recommended by the sealant manufacturer during and after installation.

1.6 COORDINATION

A. Section 01039 - Coordination and Meetings: Coordination requirements.
B. Coordinate the work with all sections referencing this section.

1.7 WARRANTY

A. Section 01700 - Warranties.
B. Correct defective work within a five-year period after Date of Substantial Completion.
C. Warranty: Include coverage for installed sealants and accessories which fail to achieve airtight seal and exhibit loss of adhesion or cohesion or do not cure.

1.8 SEALANTS

A. Type I - General Purpose Exterior Sealant: Polyurethane or Polysulfide; ASTM C920, Grade NS, Class 25, Uses M, G and A; single or multi- component.
   1. Standard colors matching finished surfaces.

B. Type II - Exterior Expansion Joint Sealer: Precompressed foam sealer; urethane with water-repellent:
   1. Face color: Gray.
   2. Size as required providing watertight seal when installed.
   3. Provide product recommended by manufacturer for traffic-bearing use.
   4. Applications: Use for:
      a. Exterior wall expansion joints
      b. Paving surface joints
      c. Set in floor components

C. Type III - Exterior Metal Lap Joint Sealant: Butyl or polyisobutylene, non-drying, non-skinning, non-curing.
   1. Applications: Use for:
   a. Concealed sealant bead in sheet metal work.
   b. Concealed sealant bead in siding overlaps.

D. Type IV - Concrete Paving Joint Sealant: Polyurethane, self-leveling; ASTM C920, Class 25, Uses T, M and A; single or multi-] component.
   1. Gray color.
   2. Applications: Use for:
      a. Joints in sidewalks and vehicular paving.

PART 2 PRODUCTS

2.1 ACCESSORIES

A. Primer: Non-staining type, recommended by sealant manufacturer to suit application.
B. Joint Cleaner: Non-corrosive and non-staining type, recommended by sealant manufacturer; compatible with joint forming materials.
C. Joint Backing: Round foam rod compatible with sealant; ASTM D1056, sponge or expanded rubber; oversized 30 to 50 percent larger than joint width.
D. Bond Breaker: Pressure sensitive tape recommended by sealant manufacturer to suit application.

PART 3 EXECUTION

3.1 EXAMINATION

A. Verify that substrate surfaces and joint openings are ready to receive work.
B. Verify that joint backing and release tapes are compatible with sealant.

3.2 PREPARATION

A. Remove loose materials and foreign matter that might impair adhesion of sealant.
B. Clean and prime joints in accordance with manufacturer's instructions.
C. Perform preparation in accordance with manufacturer's instructions and ASTM C1193.
D. Protect elements surrounding the work of this section from damage or disfiguration.

3.3 INSTALLATION

A. Perform installation in accordance with sealant manufacturer's requirements for preparation of surfaces and material installation instructions.
B. Perform installation in accordance with ASTM C1193.
C .Measure joint dimensions and size joint backers to achieve width-to-depth ratio, neck dimension, and surface bond area as recommended by manufacturer, except where specific dimensions are indicated.
D. Install bond breaker where joint backing is not used.
E. Install sealant free of air pockets, foreign embedded matter, ridges and sags.
F. Apply sealant within recommended application temperature ranges. Consult manufacturer when sealant cannot be applied within these temperature ranges.
G. Tool joints concave.
H. Precompressed Foam Sealant: Do not stretch; avoid joints except at corners, ends, and intersections; install with face 1/8 to 1/4 inch below adjoining surface.
I. Compression Gaskets: Avoid joints except at ends, corners, and intersections; seal all joints with adhesive; install with face 1/8 to 1/4 inch below adjoining surface.

3.4 CLEANING

A. Clean adjacent soiled surfaces.

3.5 PROTECTION OF FINISHED WORK

A. Protect sealants until cured.

END OF SECTION

08300

FIBERGLASS REINFORCED PLASTIC DOORS AND FRAMES

PART 1 GENERAL

1.1 SCOPE

A. This section applies to fiberglass reinforced plastic (FRP) doors and frames as manufactured by

1.2 SUBMITTALS

A. Shop drawings shall provide pertinent dimensions, hardware locations and door elevations.

1.3 PRODUCT HANDLING

A. All materials shall be delivered to the site in sealed, undamaged containers fully identified with the manufacturer's name, project number, the tag location, the door type, color and weight. The doors frames must be shipped in wood crates with wood perimeters. Store materials in original cartons, on edge in such a way to prevent falling or damage to face, corners and edges.

PART 2 PRODUCTS

2.1 DOORS

A. Doors shall be made of fiberglass reinforced plastic (FRP) using resins tailored to a specific corrosive environment (stated by the purchaser at the time the order is placed) and have a fiberglass content of 25% by weight. The doors shall be flush construction, having no seams or cracks. All mortises shall be molded in at the factory. The doors shall be 1-3/4" thick with a 15 mil (plus or minus 3 mils) color gelcoat and have an R-factor of 12. Secondary painting over pultrusions to achieve color is not acceptable.

1. Reinforcement - Adequate reinforcing and compression members shall be used to accommodate surface hinges, closures, locksets, kickplates, push or pull plates. When engineering considerations dictate, mild steel is buried in the fiberglass matrix to provide enhanced screw holding power. In no case should screws be used into the fiberglass matrix to provide holding for hinges, locks or closures or any structured attachment.
   a. Thrubolting is recommended for attachment of hinges, and closures in as much as the strength of thrubolting is five to six times as great as edge attaching with screws. When thrubolting is to occur, a compression member is to be located which will provide memory and resistance to the torquing of thrubolts.
   b. All voids between the doorplates shall be completely filled with the equivalent of 4-6 pounds expanded polyurethane foam, having a flame spread of 25 or less per ASTM E-84. A phenolic-coated kraft honeycomb may be substituted for urethane foam.
2. Flame Spread - All reinforcing resins shall contain a halogenated additive or co-reactant plus Antimony Troxide to achieve a flame spread of 25 or less per ASTM E-84 and shall be self-extinguishing per ASTM D-635.
3. Window Lites - Provide window openings of the size and shape shown on the drawings. Window lites shall be structurally retained by at least 4 fiberglass glazing pins and sealed in such a manner that the integrity of the seals remain intact.
4. Color - The color of the door or frame shall be integrally molded as the part is made.

2.2 FRAMES

A. Frames shall be similar to the doors in construction and materials except the frames shall be solid fiberglass. The stop and frame will be molded all in one piece. The frame shall be integrally gelcoated to the customer's color when molded. Mortises will be molded in. It is not permitted to route in mortises or remove any material from the head or jambs, to provide mortises.
   1. Reinforcement for mounting hinges, closures, etc., shall be of mild steel plates strategically located and buried in the resin-glass matrix so they will not be exposed to the elements.
   2. The jamb shall be flat on the backside (against the opening) and uniform in thickness so as to provide a solid, uniform surface against the wall opening. No wood or blocks or spacers are permitted.

2.3 HARDWARE

A. Door hardware (locksets and hinges only) shall be supplied and installed by the door manufacturing plant. The hardware manufacturer's warranty shall be included with the hardware installation. All hardware shall be stainless steel or titanium.

2.4 ACCEPTABLE PRODUCTS

A. Tiger Door, Manufactured by Composite Structures Inc., 6200 North 16th Street, Omaha, Nebraska 68110-1005. Ph: 1-888-891-4416.
B. Chem-Pruf Door Co., Ltd., P.O. Box 4560, Brownsville, Texas 78523. Ph: 1-800-444-6924.
C. Universal Pultrusions, LLC, P.O. Bo x1289, 100 Tillco Drive, Marshall, AR., 72650. Contact number: 870-488-4406. Website: www.unipulllc.com

PART 3 INSTALLATION

A. Installation shall be in strict compliance with manufacturer's written instructions and specifications using non-corrosive materials and methods.

PART 4 GUARANTEE

A. Door company shall unconditionally guarantee its doors for ten years against failure due to corrosion from the specific environment named at the time of purchase.

END OF SECTION

08351

OVERHEAD COILING DOORS

PART 1 GENERAL

1.1 SUMMARY

A. Provide overhead coiling doors where shown on the Drawings, as specified herein and as needed for a complete and proper installation.

B. Related work:

1. Documents affecting work of this Section include but are not necessarily limited to, General Conditions, Supplementary Conditions and Sections in Division 1 of these Specifications.

1.2 SUBMITTALS

A. Comply with pertinent provisions of Section 01340.

B. Product data: Within 45 calendar days after the Contractor has received the Owner's Notice to Proceed, submit:

1. Materials list of items proposed to be provided under this section.
2. Manufacturer's specifications and other data needed to prove compliance with the specified requirements;
3. Shop Drawings in sufficient detail show fabrication, installation, anchorage and interface of the work of this Section with the work of adjacent trades.
4. Manufacturer's recommended installation procedures which, when approved or rejecting actual installation procedures used on the Work.

1.3 QUALITY ASSURANCE

A. Use adequate numbers of skilled workman who are thoroughly trained and experienced in the necessary crafts and who are completely familiar with the specified requirements and the methods needed for the proper performance of the work of this Section.

1.4 DELIVERY, STORAGE AND HANDLING

A. Comply with the pertinent provisions of Section 01620.

PART 2 PRODUCTS

2.1 OVERHEAD COILING DOORS

A. Provide standard rollup service doors of the dimensions and arrangements shown on the Drawings and with the following attributes:

1. Design wind load: 20PSF
2. Curtain: Interlocking, rolling formed, fully foamed-in-place, insulated, flat profile. The front slat shall be fabricated from minimum 22 gauge-galvanized steel, with the back slat to be fabricated from minimum 24 gauge.
3. Bottom Bar: Extruded aluminum member, to reinforce the curtain in the guides and will have a vinyl weather seal attached.
4. Guides: Roll-formed steel shapes attached to continuous steel wall angle for door(s). Three structural steel angles with a minimum thickness of 3/16"for door(s). Guides will be weather stripped with a vinyl weather seal at each jamb on the interior and exterior curtain side.
5. Brackets: Galvanized steel plate to support the counterbalance curtain and hood.
6. Counterbalance: Helical torsion springs housed in a galvanized steel tube.

7. Weatherseals: Vinyl bottom seal, exterior guide and internal hood seals. Include header brush or broom seal with aluminum extrusion.
8. Hood: Aluminum
9. Operation: Motor and chain.
10. Finish: Curtain slats shall be galvanizes per ASTM A-525 and shall receive a rust-inhibitive, roll coating process, including bonderizing, baked on prime paint to be .2 mils thick and a baked on polyester top coat to be .6 mils thick. All non-galvanized exposed ferrous surfaces will receive one coat of rust-inhibitive primer. All aluminum will be furnished in a clear mill finish. Door(s) to have factory white paint.
11. Electric Sensing Edge: Provide for each door. Provide safety edges by Air Wave, Miller Edge, Model number MTAW21YB-U-door width minus 2" with coil cord or equal, extend full width of the door. Provide AW12 Air Wave waterproof switch. Upon contact with an obstruction the downward travel of the door shall be stopped or reversed.

B. Provide electric motor operator with three position pushbutton operation, in capacity recommended by the manufacturer. See specification Section 08720.

C. Acceptable products:
1. Model 625 Series face mounted rolling service door manufactured by Overhead Door Corporation P.O. Box 809046, Dallas, Texas 75380. 1-800-887-3667
2. Equal products of other manufacturers when approved in advance by the Architect.

2.2 OTHER MATERIALS

A. Provide other materials, not specifically described but required for a complete and proper installation, as selected by the Contractor to the approval of the Architect.

PART 3 EXECUTION

3.1 SURFACE CONDITIONS

A. Examine the area and conditions under which work of this Section will be performed. Correct conditions detrimental to the timely and proper completion of the Work. Do not proceed until unsatisfactory conditions are corrected.

3.2 INSTALLATION

A. Coordinate as required with other trades to assure proper and adequate provision in the work of those trades for interface with the work of this Section.

B. Install the work of this Section in strict accordance with the original design, the approved Shop Drawings per requirements of government agencies having jurisdiction, and the manufacturer's recommended installation procedures as approve by the Architect, anchoring all components firmly into position for long life under hard use.

C. Upon completion of the installation, put all items through at least ten operating cycles. Make required adjustments and assure that components are in optimum operating condition.

END OF SECTION

08710

DOOR HARDWARE

PART 1 GENERAL

1.1 SECTION INCLUDES

A. Hardware for Fiberglass door.
B. Thresholds.
C. Weatherstripping, seals and door gaskets.

1.2 RELATED SECTIONS

A. Section 08300 – Reinforced Plastic Doors and Frames.

1.3 REFERENCES

A. NFPA 80 - Fire Doors and Windows.
B. NFPA 101 - Life Safety Code.
C. NFPA 252 - Fire Tests of Door Assemblies.
D. UL 10B - Safety Fire Tests of Door Assemblies.

1.4 SUBMITTALS FOR REVIEW

A. Section 01300 - Submittals: Procedures for submittals.
B. Shop Drawings:
   1. Indicate locations and mounting heights of each type of hardware, schedules and catalog cuts.
   2. Submit manufacturer's parts lists and templates.
C. Samples:
   1. Submit 1 sample of hinge, latchset, lockset and closer, illustrating style, color and finish.
   2. Samples will be incorporated into the Work.

1.5 SUBMITTALS AT PROJECT CLOSEOUT

A. Section 01700 - Operation and Maintenance Data.
B. Section 01300 - Procedures for submittals.
C. Maintenance Data: Include data on operating hardware, lubrication requirements and inspection procedures related to preventative maintenance.
D. Keys: Deliver with identifying tags to Owner by security shipment direct from hardware supplier.

1.6 REGULATORY REQUIREMENTS

A. Products Requiring Electrical Connection: Listed and classified by Underwriters' Laboratories, Inc., as suitable for the purpose specified and indicated.

1.7 DELIVERY, STORAGE AND PROTECTION

A. Section 01600 - Material and Equipment: Transport, handle, store, and protect products.
B. Package hardware items individually, label and identify each package with door opening code to match hardware schedule.

1.8 PROJECT CONDITIONS

A. Section 01039 - Coordination and Meetings.
B. Coordinate the work with other directly affected sections involving manufacture or fabrication of internal reinforcement for door hardware and recessed items.
C. Sequence installation to ensure utility connections are achieved in an orderly andexpeditious manner.
D. Coordinate Owner's keying requirements during the course of the Work.

1.9 WARRANTY

A. Provide five-year manufacturer warranty for door closers.

1.10 MAINTENANCE PRODUCTS

A. Section 01730 - Operation and Maintenance Data.
B. Provide special wrenches and tools applicable to each different or special hardware component.
C. Provide maintenance tools and accessories supplied by hardware component manufacturer.

1.11 EXTRA MATERIALS

A. Section 01730 - Operation and Maintenance Data.

PART 2 PRODUCTS

2.1 KEYING

A. Door Locks: Keyed in like-groups. Master keyed.
B. Include construction keying, and control keying with removable core cylinders. Key to the existing keying system where requested.
C. Supply keys in the following quantities:
   1. Two master keys.
   2. Four construction keys.
   3. Three change keys for each lock.

PART 3 EXECUTION

3.1 EXAMINATION

A. Section 01039 - Coordination and Meetings: Verification of existing conditions before starting work.
B. Verify that doors and frames are ready to receive work and dimensions are as indicated on shop drawings.
C. Verify that electric power is available to power operated devices and is of the correct characteristics.

3.2 INSTALLATION

A. Install hardware in accordance with manufacturer's instructions.
B. Use templates provided by hardware item manufacturer.

3.3 FIELD QUALITY CONTROL

A. Architectural Hardware Consultant will inspect installation and certify that hardware and installation has been furnished and installed in accordance with manufacturer's instructions and as specified.

3.4 ADJUSTING

A. Adjust hardware for smooth operation.

3.5 SCHEDULE

A. Furnish the door the following hardware group.

1. Hardware group 1: Door: 3

1-1/2	Pr. Butts	FBB179-4-1/2 x 4-1/2 US26D NRP	Stanley
1	Entrance	35H7F15J-626	Best
1	Closer	7601DS	Dorma
1	Threshold	2005A 36" x AL	Pemko
1	Sweep	18062 36" x AL	Pemko
1	Gasket Set	305CN	Pemko
1	Kick Down Stop	1153M	Glynn Johnson
1	Kick Plate	8” x DW-2”	Rockwood
1	Top Filler Plate		
1	Closure Door Reinforcement		

END OF SECTION

08720

ELECTRIC DOOR OPERATORS

PART 1 GENERAL

1.1 SUMMARY

A. Provide electric rolling door operator, where shown on the Drawings, as specified herein and as needed for a complete and proper installation.

B. Related work:

1. Documents affecting work of this Section include but are not necessarily limited to, General Conditions, Supplementary Conditions and Sections in Division 1 of these Specifications.

1.2 SUBMITTALS

A. Product data: Within 30 calendar days after the Contractor has received the Owner's Notice to Proceed, submit:

1. Materials list of items proposed to be provided under this Section;
2. Manufacturers' specifications and other data needed to prove compliance with the specified requirements;
3. Shop drawings showing general layout, installation, materials, construction and assembly wiring.
4. Manufacturers' recommended installation procedures which, when approved by the Architect, will become the basis for accepting or rejecting actual installation procedures used on the Work.

B. Upon completion of this portion of the work and as a condition of its acceptance, deliver to the owner three copies of the operation and maintenance manual.

1.3 QUALITY ASSURANCE

A. Use adequate numbers of skilled workmen who are thoroughly trained and experienced in the necessary crafts and who are completely familiar with the specified requirements and the methods needed for proper performance of the work of this Section.

B. Comply with all governmental agencies having jurisdiction in this work.

C. Each operator shall have a minimum one (1) year manufacturer's warranty.

1.4 DELIVERY, STORAGE, AND HANDLING

A. Comply with pertinent provisions of Section 01620.

PART 2 PRODUCTS AND MATERIAL

2.1 REQUIRED ATTRIBUTES

A. Front of Hood Mount Type: (with car wash modification)

1. Motor - 115/230V single phase, **1/2 hp.** Model "RDB" with hand chain hoist & 24V three button open-close-stop control, NEMA 4, from Overhead Door Corp. or equal.
2. Reversing Contactor - Heavy Duty, electrically and mechanically interlocked.
3. Electric bottom safety edge with coil cord.

2.2 OTHER MATERIALS

A. Provide other materials, not specifically described but required for a complete and proper installation, as selected by the Contractor subject to the approval of the Architect.

PART 3 EXECUTION

3.1 SURFACE CONDITIONS

A. Examine the areas and conditions under which work of this Section will be performed. Correct conditions detrimental to timely and proper completion of the Work. Do not proceed until unsatisfactory conditions are corrected.

3.2 INSTALLATION

A. Install the work of this section in strict accordance with the manufacturer's recommendations and shop drawings and in accordance with pertinent requirements of governmental agencies having jurisdiction.

B. Electrical contractor will run electricity to the electric door operator. Final connection to the door operator shall be the responsibility of the electric door operator installer.

3.3 ADJUSTMENTS AND INSTRUCTIONS

A. Upon completion of the installation, carefully inspect each component and verify that all items have been installed in the proper location, adequately anchored and adjusted to achieve optimum operation.

B. Demonstrate to the owner, operation and maintenance procedures.

END OF SECTION

09900

PAINTING

PART 1 GENERAL

1.1 SECTION INCLUDES

A. Surface preparation.
B. Field application of paints, stains, varnishes and other coatings.

1.2 RELATED SECTIONS

A. Section 05500 - Metal Fabrications: Shop primed items.
B. Section 04300 – Unit Masonry System.

1.3 REFERENCES

A. ASTM D16 - Standard Terminology Relating to Paint, Varnish, Lacquer and Related Products.
B. ASTM D4442 - Standard Test Methods for Direct Moisture Content Measurement of Wood and Wood-Base Materials.
C. NACE (National Association of Corrosion Engineers) - Industrial Maintenance Painting.
D. NPCA - Guide to U.S. Government Paint Specifications; National Paint and Coatings Association.
E. PDCA - Architectural Specifications Manual; Painting and Decorating Contractors of America.
F. SSPC - Steel Structures Painting Manual; Steel Structures Painting Council.

1.4 DEFINITIONS

A. Conform to ASTM D16 for interpretation of terms used in this section.

1.5 SUBMITTALS FOR REVIEW

A. Section 01300 - Submittals: Procedures for submittals.
B. Samples:
   1. Submit two paper chip samples, 2 x 4 inches in size illustrating range of colors and textures available for each surface finishing product scheduled.

1.6 QUALITY ASSURANCE

A. Manufacturer Qualifications: Company specializing in manufacturing the Products specified in this section with minimum three years documented experience.
B. Applicator Qualifications: Company specializing in performing the work of this section with minimum three years experience.

1.7 DELIVERY, STORAGE AND PROTECTION

A. Section 01600 - Material and Equipment: Transport, handle, store and protect products.
B. Deliver products to site in sealed and labeled containers; inspect to verify acceptability.
C. Container Label: Include manufacturer's name, type of paint, brand name, lot number, brand code, coverage, surface preparation, drying time, cleanup requirements, color designation and instructions for mixing and reducing.
D. Paint Materials: Store at minimum ambient temperature of 45 degrees F and a maximum of 90 degrees F, in ventilated area, and as required by manufacturer's instructions.

1.8 ENVIRONMENTAL REQUIREMENTS

A. Section 01600 - Material and Equipment: Environmental conditions affecting products on site.
B. Do not apply materials when surface and ambient temperatures are outside the temperature ranges required by the paint product manufacturer.
C. Do not apply exterior coatings during rain or snow or when relative humidity is outside the humidity ranges required by the paint product manufacturer.
D. Minimum Application Temperatures for Latex Paints: 45 degrees F for interiors; 50 degrees F for exterior, unless required otherwise by manufacturer's instructions.
E. Minimum Application Temperature for Varnish Finishes: 65 degrees F for interior or exterior, unless required otherwise by manufacturer's instructions.
F. Provide lighting level of 80 ft candles measured mid-height at substrate surface.

1.9 PROJECT CONDITIONS

A. Section 01039 - Coordination and Meetings.
B. Sequence application to the following:
   1. Do not apply finish coats until paintable sealant is applied.
   2. Back prime wood trim before installation of trim.

1.10 EXTRA MATERIALS

A. Supply 1 gallons of each color, type and surface texture; store where directed.
C. Label each container with color, type, texture and room locations in addition to the manufacturer's label.

PART 2 PRODUCTS

2.1 MATERIALS

A. Coatings: Ready mixed, except field-catalyzed coatings. Prepare pigments:
   1. To a soft paste consistency, capable of being readily and uniformly dispersed to a homogeneous coating.
   2. For good flow and brushing properties.
   3. Capable of drying or curing free of streaks or sags.
B. Accessory Materials: Linseed oil, shellac, turpentine, paint thinners and other materials not specifically indicated but required to achieve the finishes specified; commercial quality.
C. Patching Materials: Latex filler.
D. Fastener Head Cover Materials: Latex filler.

2.2 FINISHES

A. Refer to finish schedule on drawings for surface finish.

2.3 BRAND OF PAINT

A. Sherwin-Williams or equal.

PART 3 EXECUTION

3.1 EXAMINATION

A. Section 01039 - Coordination and Meetings: Verification of existing conditions before starting

Work.

B. Verify that surfaces and substrate conditions are ready to receive Work as instructed by the product manufacturer.
C. Examine surfaces scheduled to be finished prior to commencement of work. Report any condition that may potentially affect proper application.
D. Test shop applied primer for compatibility with subsequent cover materials.
E. Measure moisture content of surfaces using an electronic moisture meter. Do not apply finishes unless moisture content of surfaces is below the following maximums:
   1. Plaster and Gypsum Wallboard: 12 percent.
   2. Masonry, Concrete and Concrete Unit Masonry: 12%.
   3. Interior Wood: 15 percent, measured in accordance with ASTM D4442.
   4. Exterior Wood: 15 percent, measured in accordance with ASTM D4442.
   5. Concrete Floors: 8 percent.

3.2 PREPARATION

A. Surface Appurtenances: Remove or mask electrical plates, hardware, light fixture trim, escutcheons and fittings prior to preparing surfaces or finishing.
B. Surfaces: Correct defects and clean surfaces that affect work of this section.
C. Marks: Seal with shellac those that may bleed through surface finishes.
D. Impervious Surfaces: Remove mildew by scrubbing with solution of tri-sodium phosphate and bleach. Rinse with clean water and allow surface to dry.
E. Aluminum Surfaces Scheduled for Paint Finish: Remove surface contamination by steam or high-pressure water. Remove oxidation with acid etch and solvent washing. Apply etching primer immediately following cleaning.
F. Asphalt, Creosote, or Bituminous Surfaces Scheduled for Paint Finish: Remove foreign particles to permit adhesion of finishing materials. Apply compatible sealer or primer.
G. Insulated Coverings: Remove dirt, grease and oil from canvas and cotton.
H. Concrete Floors: Remove contaminations, acid etch and rinse floors with clear water. Verify required acid-alkali balance is achieved. Allow it to dry.
I. Copper Surfaces Scheduled for Paint Finish: Remove contamination by steam, high-pressure water or solvent washing. Apply vinyl etch primer immediately following cleaning.
J. Copper Surfaces Scheduled for a Natural Oxidized Finish: Remove contamination by applying oxidizing solution of copper acetate and ammonium chloride in acetic acid. Rub on repeatedly for required effect. Once attained, rinse surfaces with clear water and allow to dry.
K. Gypsum Board Surfaces: Fill minor defects with filler compound. Spot prime defects after repair.
L. Galvanized Surfaces: Remove surface contamination and oils and wash with solvent. Apply coat of etching primer.
M. Concrete and Unit Masonry Surfaces Scheduled to Receive Paint Finish: Remove dirt, loose mortar, scale, salt or alkali powdered and other foreign matter. Remove oil and grease with a solution of tri-sodium phosphate; rinse well and allow it to dry. Remove stains caused by weathering of corroding metals with a solution of sodium metasilicate after thoroughly wetting with water. Allow it to dry.
N. Plaster Surfaces: Fill hairline cracks, small holes, and imperfections with latex patching plaster. Make smooth and flush with adjacent surfaces. Wash and neutralize high alkali surfaces.
O. Uncoated Steel and Iron Surfaces: Remove grease, mill scale, weld splatter, dirt and rust. Where heavy coatings of scale are evident, remove by [hand] [power tool] wire brushing or sandblasting; clean by washing with solvent. Apply a treatment of phosphoric acid solution, ensuring weld joints, bolts and nuts are similarly cleaned. Spot prime paint after repairs.
P. Shop Primed Steel Surfaces: Sand and scrape to remove loose primer and rust. Feather edges to make touch-up patches inconspicuous. Clean surfaces with a solvent. Prime paint bare steel surfaces.
Q. Interior Wood Items Scheduled to Receive Paint Finish: Wipe off dust and grit prior to priming. Seal knots, pitch streaks and sappy sections with sealer. Fill nail holes and cracks after primer has

dried; sand between coats.

R. Interior Wood Items Scheduled to Receive Transparent Finish: Wipe off dust and grit prior to sealing, seal knots, pitch streaks and sappy sections with sealer. Fill nail holes and cracks after sealer has dried; sand lightly between coats.

S. Exterior Wood Scheduled to Receive Paint Finish: Remove dust, grit and foreign matter. Seal knots, pitch streaks and sappy sections. Fill nail holes with tinted exterior caulking compound after prime coat has been applied.

T. Exterior Wood Scheduled to Receive Transparent Finish: Remove dust, grit and foreign matter; seal knots, pitch streaks and sappy sections with sealer. Fill nail holes with tinted exterior caulking compound after sealer has been applied.

U. Wood Doors Scheduled for Painting: Seal wood door top and bottom edge surfaces with clear sealer.

V. Metal Doors Scheduled for Painting: Prime metal door top and bottom edge surfaces.

3.3 APPLICATION

A. Apply products in accordance with manufacturer's instructions.

B. Do not apply finishes to surfaces that are not dry. Allow applied coats to dry before next coat is applied.

C. Apply each coat to uniform appearance. Apply each coat of paint slightly darker than preceding coat unless otherwise approved.

D. Sand wood surfaces lightly between coats to achieve required finish.

E. Vacuum clean surfaces of loose particles. Use tack cloth to remove dust and particles just prior to applying next coat.

F. Where clear finishes are required, tint fillers to match wood. Work fillers into the grain before set. Wipe excess from surface.

G. Prime concealed surfaces of interior woodwork with primer paint.

H. Prime concealed surfaces of interior wood surfaces scheduled to receive stain or varnish finish with gloss varnish reduced 25 percent with thinner.

3.4 CLEANING

A. Collect waste material that may constitute a fire hazard, place in closed metal containers and remove daily from site.

3.5 SCHEDULE - EXTERIOR SURFACES

A. Concrete, Concrete Block, Restored Masonry Cement Plaster:
   1. One coat of primer sealer latex.
   2. Two coats of alkyd, gloss.

B. Steel - Unprimed:
   1. One coat of alkyd primer.
   2. Two coats of alkyd enamel, gloss.

C. Steel - Shop Primed:
   1. Touch-up with zinc chromate primer.
   2. Two coats of alkyd enamel, gloss.

D. Steel - Galvanized:
   1. One coat galvanize primer.
   2. Two coats of alkyd enamel, gloss.

END OF SECTION

SECTION 13235

LAGOON CLEANING

PART 1 GENERAL

1.1 SUMMARY

A. This Section covers the cleaning of the wastewater treatment lagoon. This Section also covers the disposal of removed residuals and the associated permits, records and documentation.

B. Based on the loading and use for domestic waste only the deposits in the lagoon cell may be disposed of by on-site mixing or land application in accordance with state and federal regulations. The Contractor shall prepare his Bid accordingly. For simplicity, the deposits may be called "sludge" in this Section.

C. Contractor shall assume overall responsibility for the measurement, removal of sludge and solids from the lagoon cell, as well as the permitting, hauling, obtaining any landowner agreements for application sites, disposal of residuals, and reporting and record keeping requirements.

D. 1. Items included as part of the Removal & Disposal of Lagoon Sludge & Solids shall be as follows:

a. Obtain and comply with all state and federal regulations and permits required for the Work described herein, including payment of any permit or disposal fees.

b. Removal, disposal and transportation of the sludge and solids in and from the lagoon.

c. Sampling and testing costs for compliance with sludge disposal regulations and requirements.

d. Obtain site(s) for land application, if any, and secure land owner agreements protecting MoDOT from claims.

e. Secure other disposal sites, e.g. landfills, and fulfill all conditions of disposal.

2. Prior to removing any sludge, Contractor shall submit to MoDOT:

a. Signed statement from property owners of any land application sites, to the effect that the site has been left in good condition, free of debris and damage to roadways and fields.

b. Location and name of any landfill or other facility which received sludge and solids from Work under this section. Chain of custody forms and other records showing acceptance by the facility. The records must include sufficient information to identify the amount of deposits received on a dry ton basis.

c. Record keeping and reporting forms to meet Federal and State requirements and showing that ceiling concentrations for all regulated pollution parameters were not exceeded.

1.2 RELATED SECTIONS

N/A

1.3 REFERENCES: The following publications form a part of these specifications to the extent applicable to the Work covered herein. The revisions in effect at the time of the Bid Opening shall be applicable.

A. Applicable Standards:

1. US Environmental Protection Agency (EPA): 40 CFR Part 503 - Standards for the Use or Disposal of Sewage Sludge.
2. Water Quality publications WQ 420 through 499, Published by University Extensions, University of Missouri-System.
3. Standard Conditions for NPDES Permits issued by the Missouri Department of Natural Resources (MDNR) Missouri Clean Water Commission, Part III - Sludge & Biosolids from Domestic Wastewater Treatment Facilities.

1.4 DESCRIPTION OF EXISTING FACILITIES

A. Lagoons: The existing lagoon cell which is the subject of Work under this Section is described below.

1. The lagoon cell is an earthen basin that has been used for the treatment of domestic wastewater.
2. Approximate dimensions and arrangement are provided in the plans.

B. Lagoon Plant Contents:

1. Source: Sludge in the existing lagoon is from settled domestic wastewater. Some grit deposition is likely in the bottom of the lagoon.
2. Quality of Sludge: Contractor may assume for Bid proposes that the sludge came from domestic sources only.
3. It shall be the responsibility of the Contractor to verify all measurements when preparing his Bid.

1.5 SUBMITTALS: The Contractor shall submit the following items required by this Section. Submittals shall include but not necessarily be limited to the following:

A. With Contractor's Bid:

1. Contractor responsible for lagoon operations along with a copy of their state licensing. At least ten (10) projects of this type of equal or larger magnitude performed by the contractor must be listed. Contractor shall demonstrate knowledge and experience with 40 CFR Part 503 in describing work.

B. Prior to Lagoon Cleaning:

1. Methodology on pumping, cleaning lagoon, drying sludge (if applicable), hauling sludge, and land applying or otherwise disposing of sludge.
2. Description of land application sites and/or name of proposed disposal site(s), including a map and summary of application rate for each, including copies of soil tests and other tests required by federal and state regulations or by the receiving facility.

C. During cleaning, as soon as the results become available to the Contractor from the laboratory:

1. Log of loads of material hauled and solids tests taken with date, time, site designation, volume, and dry weight.

D. Following cleaning, within 30 days after final application or disposal, but not later than 15 business days prior to Application for Final Payment:

1. A report containing all logs of loads of material hauled, lab reports and solids tests taken with date, time, site designation, volume, and dry weight. Logs shall also include disposal facility or placement of load and applied acreage at each site, as applicable.
2. Complete record keeping and reporting forms to meet Part 503 and NPDES permit requirements for Owner's files.
3. In the case that not all sludge is to be removed, Contractor shall submit a detailed record of the areas that have been cleared of sludge. The records shall include a drawing outlining the areas of removal to the greatest accuracy practical.

1.6 QUALITY ASSURANCE

A. Contractor shall be knowledgeable of current local, Federal and State regulations in project locality regarding the removal, transportation, land application, and other disposal means of sludge.

B. Contractor shall maintain neat and accurate records, as specified herein.

C. Contractor shall perform all work and laboratory testing of sludge in accordance with applicable requirements of EPA, MDNR, and all other applicable Federal,

State, and local requirements. Laboratory tests shall be performed by a State certified testing laboratory.

D. Contractor shall have previously performed at least ten (10) projects of this type and of equal or larger magnitude.

1.7 SCHEDULING

A. Prior to lagoon cleaning the contractor shall submit an anticipated project schedule and sequencing.

PART 2 PRODUCTS

N/A

PART 3 EXECUTION

3.1 SLUDGE AND SOIL SAMPLING AND TESTING

A. Contractor shall provide testing as required to satisfy Part 503 requirements.

B. A representative sample shall be taken from each load of solids hauled. For pumped sludge, at least one sample shall be taken per 100 dry tons of sludge removed. The sample should consist of a composite of aliquots collected at regular intervals during sludge removal.

3.2 SLUDGE REMOVAL

E. Dewatering: It is anticipated that dewatering of the lagoon is required. Contractor shall be responsible for arranging and paying for the means necessary to dewater. The City of Boonville has verbally acknowledged that for a fee they will allow water only to be pumped into the City's sewer system. Contractor will be responsible for those fees.

3.4 COORDINATION WITH OWNER'S OPERATIONS

A. Contractor shall coordinate with MoDOT's personnel to maintain MoDOT's continuity of lagoon operations until the City of Boonville has formally accepted the connection to the City's system of the new sewer line and begun accepting sewer wastes.

3.5 SLUDGE TRANSPORTATION

A. Contractor shall be responsible for maintaining and restoring all nonpublic roads and roads on land application sites as follows.

B. Contractor shall have properly licensed drivers and vehicles, and operate vehicles in accordance with applicable local, State and Federal codes.

C. All trucks used to transport sludge must be non-leaking tanker trucks.

3.6 LAND APPLICATION

A. Comply with requirements of 40 CFR Part 503. Surface spreading will be permitted only if Contractor can demonstrate that vector attraction reduction requirements are met, in accordance with 40 CFR Part 503. Otherwise, sludge and deposits shall be subsurface injected.

B. Contractor shall not apply deposits at rates greater than the agronomic rate or permissible metals loading rates calculated by Contractor and submitted to Owner prior to disposal.

C. Contractor shall furnish to Owner or Owner's representative, detailed information on the number of loads and volume applied to each application site, on a daily basis. This information shall be incorporated into a report by the Contractor that the Owner may use for sludge reporting to MDNR that satisfies the requirements of the MDNR and 40 CFR Part 503 and shall be delivered to the Owner by the Contractor.

D. Contractor shall be responsible for removing and disposing of any sludge improperly applied or applied to a non-designated site or area.

E. Field Quality Control: Based on the analysis of sludge samples taken during the application process, Contractor shall adjust the application rate to all sites, as necessary.

3.7 LANDFILL DISPOSAL

A. Compliance with all applicable Federal, State, local and landfill requirements, including any and all fees, is the responsibility of the Contractor.

END OF SECTION

15050

MATERIALS AND METHODS

PART 1 GENERAL

1.1 OPERATION PRIOR TO ACCEPTANCE

A. When any equipment is operable, and it is to the advantage of the Contractor to operate the equipment, he may do so provided that he properly supervises the operation, and retains full responsibility for the equipment operated. Before final acceptance by the owner, the Contractor shall properly clean the equipment, install clean filter media, make all required adjustments and complete all punch list items.

1.2 WARRANTY

A. Warrant to Owner that materials, equipment, and workmanship provided under this Division of the Specifications will be free from defects for a period of one year from the date of acceptance by Owner. Additional equipment warranty requirements are stated in other sections of the specifications.

PART 2 PRODUCTS

2.1 MATERIALS

A. Products are to be new and free from defects, and are to be installed by competent specialist for each trade in accordance with the manufacturer's recommendations. Materials or equipment not meeting these standards, or the acceptance of the Engineer, may be rejected and will be replaced at no additional costs to the owner.

PART 3 EXECUTION

3.1 HANGERS AND SUPPORTS

A. Provide and install per ANSI Standards SP-58 and SP-69.

B. Adequately support pipes throughout the buildings, both horizontal and vertical.

C. Hanger Schedule

PIPE SERVICE	HANGER SIZE	TYPE	GRINNELL NO.
Uninsulated Steel	2" & smaller	Split Ring	108 with 114
Uninsulated Copper	2" & smaller	Ring	CT 99
Cast Iron Soil Pipe	All	Clevis	590
Insulated Steel	4" & smaller	Clevis	260 with shield
Insulated Copper	2" & smaller	Clevis	CT 65

D. Multiple or Trapeze Hangers” Steel channels with angles or unistrut spacers and hanger rods.
E. Wall Support 2 1/2 inch and over: Welded steel bracket and wrought steel clamp.
F. Vertical Support: Steel riser clamp.
G. Provide copper plated hangers and supports for copper piping or provide sheet plastic tape wrapping between hanger or support and piping.
H. Equivalent products of Fee and Mason or Elcen are acceptable substitutes for the Grinnell hangers specified.
I. Maximum horizontal pipe hanger support spacing and minimum rod diameter for rigid rod hangers (see chart).
J. Install hangers to provide minimum 1/2-inch clear space between finished covering and adjacent work.
K. Place a hanger within one foot of each horizontal elbow.
L. Support horizontal soil pipe near each hub, with 10 feet maximum spacing between hangers.
M. Support PVC piping per manufacturer's recommendations.

3.3 ELECTRICAL WIRING OF MOTORS AND EQUIPMENT

A. Follow manufacturer's published directions in the delivery, storage, protection, installation, piping and wiring and start-up of equipment and materials.

3.4 ACCESS PANELS AND DOORS

A. Install access panels and doors for concealed equipment and valves.

3.5 TESTS

A. Field test mechanical equipment furnished and installed under this Contract as required by the Engineer Tests.
B. Perform tests required by governing authorities, in addition to tests specified in individual Sections.
C. Complete final installation and testing 14 days prior to Contract Substantial Completion Date.
D. All pipe work shall be tested at the pressure equal to the design working pressure of the pipe for the intended service and maintain this pressure for not less than two hours with not more than 1% drop in pressure.
E. Notify architect/owner of any test failures. Submit weekly pipe test log listing service; section tested, initial and final pressure, time and temperature.

END OF SECTION

SECTION 15100

PROCESS AND MISCELLANEOUS VALVES

PART 1 GENERAL

1.1 SECTION INCLUDES: This Section includes valves and accessories.

A. This section includes, but is not limited to the following types of valves:
1. Resilient Seated Gate Valves.
2. Hydrants.
3. Corporation Stops.

1.2 RELATED SECTIONS

A. Section 02530 - Piping System Products.

B. Section 02535 - Piping System Installation.

1.3 REFERENCES: The following publications form a part of these specifications to the extent indicated by references thereto. The revision in effect at the time of the Bid Opening shall be applicable. If these publications conflict with the requirements of this section, the section requirements shall govern.

A. American National Standards Institute (ANSI):
1. B-16.1 - Cast-Iron Pipe Flanges and Flanged Fittings, Class 25, 125, and 250.

B. American Society for Testing and Materials (ASTM):
1. A126 - Gray Iron Castings for Valves, Flanges and Pipe Fittings.
2. A536 - Ductile Iron Castings.

C. American Water Works Association (AWWA):
1. C504 - Rubber-Seated Butterfly Valves.
2. C508 - Swing Check Valves for Water Service.
3. C509 - Resilient Seated Gate Valves for Water and Sewage Service.
4. C550 - Protective Interior Coatings for Valves and Hydrants.
5. C600 - Installation of Ductile-Iron Water Mains and Their appurtenances.

1.4 SUBMITTALS

A. Submit as specified in Section 01300 - Submittals

B. Product Data for Review: Including, but not limited to, the following:
1. Catalog data or illustrations showing principal dimensions, parts and materials.
2. Drawings illustrating construction of actuators.
3. Spare parts list referenced to illustration of parts.
4. Assembly and disassembly or repair instructions.
5. Dimensions of the clearance required for valves.
6. Coatings.
7. Electric actuator data, including wiring diagrams, torque rating and calculation.

C. Certificates and Affidavits: Furnish prior to shipment. Include the following:
1. Test certificates.
2. Affidavit of compliance with applicable AWWA Standard.

1.5 OPERATION AND MAINTENANCE DATA: The manufacturers shall provide approved Operation and Maintenance Instructions, in accordance with Section 01700 - Contract Closeout.

1.6 QUALITY ASSURANCE

A. Manufacturers shall be experienced in the design and manufacture of specific valves and accessories for a minimum period of 5 years.

1.7 DELIVERY, STORAGE AND HANDLING

A. Ship all valves with suitable end covers to prevent foreign material into valve body.

B. Protect valve threads, flanges, stems, and operators from damage.

C. Ship valves 4-inch and larger to the project site tagged with the valve number shown on the Drawings. Tag smaller valves to show the piping system in which it is to be used.

1.8 RESPONSIBILITY: Actuators, their controls and accessories shall be the responsibility of the valve manufacturer for sizing, assembly, certification, field testing, and any adjustments necessary to operate the valve as specified.

1.9 VALVE OPERATION: All valves shall operate clockwise to close and counter-clockwise to open.

PART 2 PRODUCTS

2.1 RESILIENT SEATED GATE VALVES

A. Acceptable Manufacturers:
1. American Cast Iron Pipe Company
2. M & H Valve Company
3. Mueller Company
4. U.S. Pipe & Foundry Company.
5. Engineer approved equal.

B. Design Requirements:
1. Conform to AWWA C509 and as specified.
2. Suitable for working pressure of 175 psi.
3. Non-rising bronze stem type with 2-inch square operating nut.
4. Valve stems shall use double o-ring seals.
5. Ends: Mechanical joint, hub, or flanged, as required by piping system.
6. Actuators: All valves shall open counterclockwise.

C. Materials and Construction:
1. Interior coating: Comply with AWWA C550.
2. Buried valves shall have a valve box for the operating nut.

2.2 HYDRANTS

A. Hydrants shall be cast-iron body, fully bronze mounted, suitable for a working pressure of 150 lbs. per square inch and a test pressure of 300 psi (in open and closed position) and shall be in accordance with the latest specifications of AWWA C502 and equipped with 6" flanged joint inlet connection. Hydrants shall be constructed in a manner permitting withdrawal of internal working parts without disturbing barrel or casting. Hydrants shall be Kennedy K81D, 5¼, 3 way with 6" shoe with 6" shoe to match water main as indicated on plans; or approved equals. The valve opening shall be 5¼" in diameter, with net area of water way at smallest part, with valves wide open,

not less than 120% of valve opening. Hose nozzles shall be bronze or non-corrosive metal. Provide two 2½" nozzles and one pumper nozzle. Nozzle caps shall be securely chained to the barrel.

2.3 VALVE BOXES

A. Valve boxes shall be provided for all buried valves.

B. Acceptable manufacturers:
1. Clay and Bailey Manufacturing Company
2. Clow Corporation
3. Mueller Company
4. Tyler Pipe/Tyler Union
5. Equivalent products of other manufacturers may be proposed to Engineer as substitutions.

C. Design:
1. For valves within roadways and traffic areas: Boxes shall be two piece cast iron slip type or three piece cast iron screw type, with 5-1/4 inch diameter shaft.
2. For non-traffic areas, boxes shall consist of 6-inch diameter SDR-21 PVC pipe, with bell placed on concrete bricks. Provide cast iron cover, Clay & Bailey 2194, Tyler Union, or equal, and lid, Clay & Bailey 1108, Tyler Union, or equal.
3. Provide shaft extension to bring operating nut to within 2 feet of valve box top.

2.4 CORPORATION STOPS AND BALL VALVES

A. Ball valve curb stops shall be of brass construction and contain a cast brass ball with TFE coating. Valve shall contain two Buna-N seals to allow for shut-off in either direction and two Buna-N stem O-rings. End piece shall be epoxied to ensure a water-tight seal. Ball valve curb stops shall be manufactured by the A. Y. McDonald Manufacturing Co. or approved equal.

B. Ball angle valves shall be of brass construction and contain a cast brass ball with TFE coating. Valve shall contain two Buna-N seats and a Buna-N stem O-ring. Valves shall come equipped with phosphorous-bronze retaining rings to hold the cap and stem in place and to hold the brass swivel-nut in place. End piece shall be epoxied to ensure a water-tight seal. Ball angle valves shall be manufactured by the A. Y. McDonald Manufacturing Co. or approved equal.

2.5 SHOP PAINTING

A. Prepare surfaces and paint or coat all valves, floor stands, valve boxes, corporation stops, and all related accessories standard of the manufacturer, unless otherwise specified herein.
1. Unfinished ferrous metal interior surfaces of all valves shall be coated with epoxy paint with a total fry film thickness of 10 mils.
2. Exterior ferrous metal surfaces of all valves which will be exposed in indoor or outdoor locations shall be coated with rust inhibitive primer.
3. Valves which will be buried shall be coated with asphalt varnish with a total dry film thickness of 3 mils.

B. Paint and coatings shall be suitable for the service intended.

C. Submit type of paint or coating proposed with drawings and data prior to fabrication/delivery.

PART 3 EXECUTION

3.1 INSTALLATION

A. Comply with provisions of AWWA C600 and as specified.

B. Thoroughly clean and remove all shipping materials prior to setting. Operate all valves from fully opened to totally closed.

C. Equip valves with anchorage where indicated.

D. Valves in grooved-end piping shall be provided with grooved ends if available. If only flanged-end valves are available, a flange adaptor manufactured by the grooved coupling manufacturer shall be used, Victaulic "Vic-flange" or Engineer approved equal.

E. Installation of electric valve actuators shall comply with manufacturer's installation instructions.

3.2 HYDRANT INSTALLATION

A. Installation of the hydrant shall be per AWWA C600. Hydrant is designed to fail at the ground-line joint on vehicle impact. Install 6 inch thick concrete collar with a diameter of 2 feet, around the hydrant barrel at or near the ground line when poor soil conditions are present and directed by Engineer.

B. Each hydrant shall be placed upon ample blocking to provide 6" between the bottom of pipe and bottom of drainage pit. The backside of hydrant opposite pipe connection shall be firmly wedged with a block of concrete between the hydrant and vertical face of trench. All hydrants and valves shall be checked before placing in the line, in order to see that all foreign material is removed, and all packing, seats, etc., are tight. Each hydrant shall be opened and closed to see that all moving parts are in proper working order.

C. Each hydrant shall be installed with not less than ten (10) cubic feet of crushed 1" stone, with no fines, around the base of the hydrant. To prevent clogging of the drainage pit, the stone should be covered with 8-mil Polyethylene or similar waterproof material before backfilling.

D. Hydrants shall be set at an elevation that the connecting pipe and the distribution main shall have the same depth of cover. The backside of the hydrant opposite the pipe connection shall be firmly braced against the vertical face of the trench to prevent the hydrant from blowing off at the line. All wedging, anchoring tees and couplings, as required, shall be in accordance with these specifications. For Hydrants more than 6' off the main use PVC w/Romac grip rings between the main and valve. (The gate valve shall be open during such test.) No additional payment will be allowed for anchoring mechanisms.

3.3 FIELD PAINTING: Paint specified below is as manufactured by the Tnemec Company, Inc., Kansas City, Missouri. Materials specified herein are cited as minimum standard of quality which will be acceptable. Equivalent products of Tnemec Company, Inc., Carboline, Devoe, Induron, PPG Amercoat, or Sherwin-Williams shall also be acceptable.

A. Valves and all accessories located inside wetwells, tanks, and vaults.
   1. Surface preparation: SSPC-SP10 Near-White Metal Blast Cleaning.
   2. Coating System:

Prime Coat (As specified by manufacturer for valves and accessories)		
1st Coat:	Series 69 Hi-Build Epoxoline II	3.0 - 5.0 mils DFT
2nd Coat:	Series 69 Hi-Build Epoxoline II	4.0 - 6.0 mils DFT
Total Dry Film Thickness:		7.0 - 11.0 mils

B. Valves, and all accessories exposed in interior locations:
   1. Surface preparation: SSPC-SP6 Commercial Blast Cleaning, or as recommended by coating manufacturer to create adequate surface profile.
   2. Coating System:

Prime Coat (As specified for by manufacturer valves and accessories)

1st Coat:	Series 69 Hi-Build Epoxoline II	3.0 - 5.0 mils DFT
2nd Coat:	Series 69 Hi-Build Epoxoline II	4.0 - 6.0 mils DFT
Total Dry Film Thickness:		7.0 - 11.0 mils

C. Valves and all accessories exposed in exterior locations:

1. Surface preparation: SSPC-SP6 Commercial Blast Cleaning, or as recommended by coating manufacturer to create adequate surface profile.
2. Coating System:

Prime Coat (As specified for by manufacturer valves and accessories)

1st Coat:	Series 69 Hi-Build Epoxoline II	4.0 - 6.0 mils DFT
2nd Coat:	Series 75 Endura-Shield	3.0 - 5.0 mils DFT
Total Dry Film Thickness:		7.0 - 11.0 mils

3.4 FIELD TESTING

A. Perform on piping and valves as specified in Section 02535 - Piping Systems Installation, and for the valves specified herein per valve manufacturer's instructions.

B. Hydrants: All hydrants shall be successfully tested prior to acceptance by the Owner. Each hydrant shall be tested using the procedure described below. Hydrants that fail shall have the failed gaskets replaced and nuts tightened. Hydrants that continue to fail testing shall be replaced.

1. Open all hydrants fully and fill with water; close all outlets.
2. To prevent caps from being blown off and to prevent other possible damage, vent air from the hydrant by leaving one of the caps slightly loose as the hydrant is being filled. After all air has escaped, tighten the cap before proceeding.
3. Apply pressure of 150 psi, maximum.
4. Check for leakage at flanges, nozzles, and operating stem.

END OF SECTION

15500

HEATING, VENTILATING AND AIR CONDITIONING

PART 1 GENERAL

1.1 SUMMARY

A. Provide heating and ventilating systems where shown on the Drawings, as specified herein and as needed for a complete and proper installation including but not necessarily limited to:
1. Gas-fired, ceiling-hung Unit Heaters
2. Temperature control system including low-voltage wiring.
3. Engineering and design, refer to drawings.

B. Related work:
1. Documents affecting work of this Section include, but are not necessarily limited to, General Conditions, Supplementary Conditions and Sections in Division 1 of these Specifications.

1.2 SUBMITTALS

A. Comply with pertinent provisions of Section 01340.

B. Product data: Within 30 calendar days after the Contractor has received the Owner's Notice to Proceed, submit:
1. Manufacturers catalogs, samples and other items needed to fully demonstrate the quality of the proposed materials and equipment.

C. Record drawings:
1. Comply with pertinent provisions of Section 01720.
2. Include a copy of the Record Drawings in each copy of the operation and maintenance manual described below.

D. Upon completion of this portion of the Work, and as a condition of its acceptance, deliver to the Architect two copies of an operation and maintenance manual compiled in accordance with the provisions of Section 01730 of these Specifications.

1.3 QUALITY ASSURANCE

A. Use adequate numbers of skilled workmen who are thoroughly trained and experienced in the necessary crafts and who are completely familiar with the specified requirements and the methods needed for proper performance of the work of this Section.
B. Without additional cost to the Owner, provide such other labor and materials as are required to complete the work of this Section in accordance with the requirements of governmental agencies having jurisdiction, regardless of whether such materials and associated labor are called for elsewhere in these Contract Documents.
C. Provide minimum 1-year manufacturer's warranty on all units.

1.4 DELIVERY, STORAGE AND HANDLING

A. Comply with pertinent provisions of Section 01620.

PART 2 PRODUCTS

2.1 VIBRATION ISOLATION AND FLEXIBLE CONNECTIONS

A. At ducts to equipment, provide vent-fabric flexible connections with a minimum of 6" full length and approved by the governmental agencies having jurisdiction.

B. Provide additional sound isolation as required to limit the noise level in conditioned space to a maximum of NC-40.

2.2 UNIT HEATERS

A. Unit Heater. Furnish gas fired, propeller fan and unit heaters as manufactured by one of the following companies: Crane, Reznor, National, Pearless, Carrier, Tran Bryant, or equal in the capacity shown on the plans. Units shall be A.G.A. certified, completely assembled and be operationally tested before shipment from factory.

B. Unit Heater Exchanger. Shall be stainless steel seam or arc welded with tubes and headers not lighter than 20 gauge thickness. Draft diverters shall be aluminized steel or equal. Electrical characteristics as required.

C. Burners. The burners shall be of cast iron or stainless steel construction that will give quiet, smooth ignition throughout the length of the burner. They shall be equipped with adjustable air shutters to regulate flame characteristics for maximum efficiency. All burners shall be individually removable.

D. Pilot. Shall be of the intermittent pilot systems type using gas only when the system calls for heat, is lit by high voltage capacitive discharge spark, turns off automatically when demand for heat is satisfied or flame is lost. If flame is lost, unit shuts off main valve, re-starts ignition sequence.

E. Wiring. Units shall be factory wired for high limit and fan control. Fan motor shall be 115 volt, single phase, 60 cycle totally enclosed with overload protection.

F. Gas Valve. The gas valve shall be standard type 24-volt single phase, 60 cycle arranged for 100% safety shut off on main and pilot burner. 115/24-volt transformer to be supplied with unit heater and factory wired on low voltage side to gas valve.

2.3 AUTOMATIC TEMPERATURE CONTROL

A. Provide a system of temperature control with the attributes listed below.

1. Include thermostats, sensors, temperature controllers, and air piping as requiring for a complete and operable system compatible with approved Heating and Central Air Unit.
2. Provide devices calibrated and adjusted with the actual operating conditions.

2.4 OTHER MATERIALS

A. Provide other materials, not specifically described but required for a complete and proper installation, as selected by the Contractor subject to the approval of the Architect.

PART 3 EXECUTION

3.1 SURFACE CONDITIONS

A. Examine the areas and conditions under which work of this Section will be performed. Correct conditions detrimental to timely and proper completion of the Work. Do not proceed until unsatisfactory conditions are corrected.

3.2 COORDINATION

A. Coordinate as required with other trades to assure proper and adequate provision in the work of those trades for interface with the work of this Section.

3.3 EQUIPMENT INTERFACE

A. Provide all required shutoff valves, unions and final connections of piping to the work of this Section.
B. For electrically operated equipment, verify the electrical characteristics actually available for the work of this Section and provide equipment meeting those characteristics.

3.4 INSTRUCTIONS

A. Upon completion of this portion of the Work, and prior to its acceptance by the Owner, provide a qualified engineer and fully instruct the Owner's maintenance personnel in the proper operation and maintenance of items provided under this Section.
B. Demonstrate the contents of the approved operation and maintenance manual required under Article 1.2 above.

3.5 TESTING AND ADJUSTING

A. Test and adjust each piece of equipment and each system as required to assure proper balance and operation.
   1. Test and regulate ventilation systems to conform to the air volumes shown on the approved design drawings.
B. Submit two sets of test and balance reports to the Architect for approval.
C. Eliminate noise and vibration, and assure proper function of all controls, maintenance of temperature and operation in accordance with the approved design.
D. Secure required approval from governmental agencies having jurisdiction.

END OF SECTION

Missouri Highways and Transportation Commission
Standard Bid/Proposal Provisions, General Terms and Conditions and Special Terms and Conditions

STANDARD SOLICITATION PROVISIONS

a. The solicitation for the procurement of the supplies referenced therein, to which these "Standard Bid Provisions, General Terms and Conditions and Special Terms and Conditions" are attached, is being issued under, and governed by, the provisions of Title 7 – Missouri Department of Transportation, Division 10 – Missouri Highways and Transportation Commission, Chapter 11 – Procurement of Supplies, of the Code of State Regulations. The Missouri Highways and Transportation Commission (**MHTC**), acting by and through its operating arm, the Missouri Department of Transportation (**MoDOT**), draws the Bidder's attention to said 7 CSR 10-11 for all the provisions governing solicitation and receipt of bids/quotes and the award of the contract pursuant to this solicitation.

b. All bids/quotes must be signed with the firm name and by a responsible officer or employee. Obligations assumed by such signature must be fulfilled.

GENERAL TERMS AND CONDITIONS

Definitions

Capitalized terms as well as other terms used but not defined herein shall have the meaning assigned to them in section 7 CSR 10-11.010 Definition of Terms.

Nondiscrimination

a. The Contractor shall comply with all state and federal statutes applicable to the Contractor relating to nondiscrimination, including, but not limited to, Chapter 213, RSMo; Title VI and Title VII of Civil Rights Act of 1964 as amended (42 U.S.C. Sections 2000d and 2000e, *et seq.*); and with any provision of the "Americans with Disabilities Act" (42 U.S.C. Section 12101, *et seq*).
b. Sanctions for Noncompliance: In the event of the Contractor's noncompliance with the nondiscrimination provisions of this contract, MHTC shall impose such contract sanctions as it or the Federal Highway Administration may determine to be appropriate, including, but not limited to:
   i. withholding of payments to the Contractor under the contract until the Contractor complies, and/or,
   ii. cancellation, termination or suspension of the contract, in whole or in part.

Contract/Purchase Order

a. By submitting a bid/quote, the Bidder agrees to furnish any and all equipment, supplies and/or services specified in the solicitation documents, at the prices quoted, pursuant to all requirements and specifications contained therein.
b. A binding contract shall consist of: (1) the solicitation documents, amendments thereto, and/or Best and Final Offer (BAFO) request(s) with any changes/additions, (2) the Contractor's bid response, and (3) the MHTC's acceptance of the bid by post-award contract or purchase order.
c. A notice of award does not constitute an authorization for shipment of equipment or supplies or a directive to proceed with services. Before providing equipment, supplies and/or services, the Contractor must receive a properly authorized notice to proceed and/or purchase order.

Applicable Laws and Regulations

a. The contract shall be construed according to the laws of the State of Missouri. The Contractor shall comply with all local, state, and federal laws and regulations related to the performance of the contract. The exclusive venue for any legal proceeding relating to or arising, out of the contract shall be in the Circuit Court of Cole County, Missouri.
b. The Contractor must be registered and maintain good standing with the Secretary of State of the State of Missouri, Missouri Department of Revenue, and other regulatory agencies, as may be required by law or regulations. Prior to the issuance of a purchase order and/or notice to proceed, the Contractor may be required to submit to MHTC a copy of their current Authority Certificate from the Secretary of State of the State of Missouri and/or a copy of their Certificate of No Tax Due from the Missouri Department of Revenue.
c. Prior to the issuance of a purchase order and/or notice to proceed, all **out-of-state** Contractors **providing services** within the state of Missouri must submit to MHTC a copy of their current Transient Employer Certificate from the Missouri Department of Revenue, in addition to a copy of their current Authority Certificate from the Secretary of State of the State of Missouri.

Executive Order:

The Contractor shall comply with all the provisions of Executive Order 07-13, issued by the Honorable Matt Blunt, Governor of Missouri, on the sixth (6th) day of March, 2007. This Executive Order, which promulgates the State of Missouri's position to not tolerate persons who contract with the state engaging in or supporting illegal activities of employing individuals who are not eligible to work in the United States, is incorporated herein by reference and made a part of this Agreement.

1) "By signing this Agreement, the Contractor hereby certifies that any employee of the Contractor assigned to perform services under the contract is eligible and authorized to work in the United States in compliance with federal law."
2) In the event the Contractor fails to comply with the provisions of the Executive Order 07-13, or in the event the Commission has reasonable cause to believe that the contractor has knowingly employed individuals who are not eligible to work in the United States in violation of federal law, the Commission reserves the right to impose such contract sanctions as it may determine to be appropriate, including but not limited to contract cancellation, termination or suspension in whole or in part or both.
3) The Contractor shall include the provisions of this paragraph in every subcontract. The Contractor shall take such action with respect to any subcontract as the Commission may direct as a means of enforcing such provisions, including sanctions for noncompliance.

Preferences

a. In the evaluation of bids/quotes, preferences shall be applied in accordance with 7 CSR 10-11.020(7). Contractors should apply the same preferences in selecting subcontractors. The attached document entitled **"VENDOR INFORMATION AND PREFERENCE CERTIFICATION FORM"** must be completed and returned with the solicitation documents.

b. Bidders are encouraged to obtain minority business enterprise (MBE) and women business enterprise (WBE) participation in this work through the use of subcontractors, suppliers, joint ventures, or other arrangements that afford meaningful participation for M/WBEs. Bidders are encouraged to obtain 10% MBE and 5% WBE participation.

Cancellation of Contract

The MHTC may cancel the Contract at any time for a material breach of contractual obligations or for convenience by providing Contractor with written notice of cancellation. Should the MHTC exercise its right to cancel the contract for such reasons, cancellation will become effective upon the date specified in the notice of cancellation sent to the Contractor.

Bankruptcy or Insolvency

Upon filing for any bankruptcy or insolvency proceeding by or against the Contractor, whether voluntarily, or upon the appointment of a receiver, trustee, or assignee, for the benefit of creditors, the Commission reserves the right and sole discretion to either cancel the Agreement or affirm the Agreement and hold the Contractor responsible for damages.

Warranty

The Contractor expressly warrants that all equipment, supplies, and/or services provided shall: (1) conform to each and every specification, drawing, sample or other description which was furnished to or adopted by the MHTC, (2) be fit and sufficient for the purpose expressed in the solicitation documents, (3) be merchantable, (4) be of good materials and workmanship, and (5) be free from defect.

Status of Independent Contractor

The Contractor represents itself to be an independent Contractor offering such services to the general public and shall not represent itself or its employees to be an employee of the MHTC. Therefore, the Contractor shall assume all legal and financial responsibility for taxes, FICA, employee fringe benefits, workers' compensation, employee insurance, minimum wage requirements, overtime, etc., and agrees to indemnify, save and hold the MHTC, its officers, agents and employees harmless from and against any and all losses (including attorney fees) and damage of any kind related to such matters.

Non-Waiver

If one of the parties agrees to waive its right to enforce any term of this Contract, that party does not waive its right to enforce such term at any other time or to enforce any or all other terms of this Contract.

Indemnification

The Contractor shall defend, indemnify and hold harmless MHTC, including its members and department employees, from any claim or liability whether based on a claim for damages to real or personal property or to a person for any matter relating to or arising out of the Contractor's performance of its obligations under the contract awarded pursuant to this solicitation.

SPECIAL TERMS AND CONDITIONS

Tax Exempt Status:

MHTC is exempt from paying Missouri Sales Tax, Missouri Use Tax and Federal Excise Tax. However, the Contractor may themselves be responsible for the payment of taxes on materials they purchase to fulfill the contract. A Project Tax Exemption Certificate will be furnished to the successful Bidder upon request if applicable.

Insurance

The Contractor shall maintain or cause to be maintained at Contractor's own expense commercial general liability, automobile liability, worker's compensation insurance against negligent acts, errors or omissions of the Contractor, or its subcontractors and anyone directly or indirectly employed by any of them. Any insurance policy required as specified in this Section shall be written by a company that is licensed and authorized to issue such insurance in the state of Missouri and shall provide insurance coverage for not less than the following limits of liability:

1) General Liability: Not less than $500,000 for any one person in a single accident or occurrence, and not less than $3,000,000 for all claims arising out of a single occurrence;
2) Automobile Liability: Not less than $500,000 for any one person in a single accident or occurrence, and not less than $3,000,000 for all claims arising out of a single occurrence;
3) Missouri State Workmen's Compensation policy or equivalent in accordance with state law.

Upon request from the Commission, the Contractor shall provide the Commission with certificates of insurance evidencing the required coverage and that such insurance is in effect.

Bid Guaranty/Contract Bond

a. Each bid shall be accompanied by a Bid Bond, Certified Check, Cashier's Check or Bank Money Order payable to the Director of Revenue – Credit State Road Fund for an amount equal to Five Percent (5%) of the amount of the bid submitted. This is to act as a guarantee that the bidder, if awarded the contract, will furnish an acceptable performance and payment bond (Contract Bond) or a cashier's check, a bank money order or a certified check made payable to "Director of Revenue--Credit State Road Fund" in an amount equal to One Hundred (100%) of the contract price.
b. If a BID BOND is used (in lieu of a certified check, cashier's check, or bank money order), it must be in the form provided and executed by the bidder as principal and by a surety company authorized to do business in the State of Missouri as surety. The agent executing the same on behalf of the surety company must attach a current Power of Attorney setting forth his authority to execute the bond involved.
c. Certified Checks, Cashier's Checks or Bank Money Orders of unsuccessful bidders will be returned as soon as the award is made. The checks or bank money orders of the successful bidder(s) will be retained until the contract is executed and a satisfactory Performance and Payment (Contract Bond) is furnished. Bid Bonds will not be returned except on specific request of the bidder.
d. Failure to execute the contract and file acceptable performance payment (Contract Bond) or cashier's check, bank money order or certified check

within **15 days** after the contract has been mailed to the bidder shall be just cause for the cancellation of the award and the forfeiture of the proposal guaranty. Award may then be made to the next lowest responsible bidder, or the work may be re-advertised and performed under contract or otherwise, as the Commission may decide. No contract shall be considered effective until it has been executed by all parties thereto.

Subcontracting

a. It is specifically understood that no portion of the material or any interest in the contract, shall be subcontracted, transferred, assigned or otherwise disposed of, except with the written consent of MHTC. Request for permission to subcontract or otherwise dispose of any part of the work shall be in writing to MHTC and accompanied by documentation showing that the organization which will perform the work is particularly experienced and equipped for such work.
b. Consent to subcontract or otherwise dispose of any portion of the work shall not be construed to relieve the Contractor of any responsibility for the production and delivery of the contracted work and the completion of the work within the specified time.
c. All payments for work performed by a subcontractor shall be made to the Contractor to whom the contract was awarded and the purchase order issued.

Prohibition Of Employment Of Unauthorized Aliens:

a. Non-employment of Unauthorized Aliens: Pursuant to Section 285.530, RSMo., no business entity or employer shall knowingly employ, hire for employment, or continue to employ an unauthorized alien to perform work within the State of Missouri. As a condition for the award of any contract or grant in excess of five thousand dollars by the State or by any political subdivision of the State to a business entity, or for any business entity receiving a state-administered or subsidized tax credit, tax abatement, or loan from the state, the business entity shall:

   1) By sworn affidavit and provision of documentation, affirm its enrollment and participation in a federal work authorization program with respect to the employees working in connection with the contracted services. E-Verify is an example of a federal work authorization program. The business entity must affirm its enrollment and participation in the E-Verify federal work authorization program with respect to the employees proposed to work in connection with the services requested herein by providing acceptable enrollment and participation documentation consisting of **completed** copy of the E-Verify Memorandum of Understanding (MOU). For business entities that are not already enrolled and participating in a federal work authorization program, E-Verify is available at http://www.dhs.gov/files/programs/gc_1185221678150.shtm
   2) By sworn affidavit, affirm that it does not knowingly employ any person who is an unauthorized alien in connection with the contracted services. A copy of the affidavit referenced herein is provided within this document, attached as Exhibit A.

b. Proof of Lawful Presence For Sole Proprietorships and Partnerships: If the business entity is a sole proprietorship or partnership, pursuant to Section 208.009, RSMo., each sole proprietor and each general partner shall provide affirmative proof of lawful presence in the United States. Such sole proprietorship or partnership is eligible for temporary public benefits upon submission by each sole proprietor and general partner of a sworn affidavit of his/her lawful presence on the United States until such lawful presence is affirmatively determined, or as otherwise provided by Section 208.009, RSMo. A copy of the affidavit reference herein is provided within this document, attached as Exhibit B.

Construction Safety Program

Missouri law, 292.675 RSMo, requires the awarded Contractor and its subcontractor(s) to provide a ten-hour occupational safety and health administration (OSHA) construction safety program (or a similar program approved by the Missouri Department of Labor and Industrial Relations as a qualified substitute) for their on-site employees (laborers, workmen, drivers, equipment operators, and craftsmen) who have not previously completed such a program and are directly engaged in actual construction of the improvement (or working at a nearby or adjacent facility used for construction of the improvement). The Contractor and its subcontractor(s) shall require all such employees to complete this ten-hour program, pursuant to 292.675 RSMo, unless they hold documentation on their prior completion of said program. Penalties for non-compliance include Contractor forfeiture to the Commission in the amount of $2,500, plus $100 per contractor and subcontractor employee for each calendar day such employee is employed beyond the elapsed time period for required program completion under 292.675 RSMo.

Prevailing Wage

a. The work to be performed under this solicitation is governed by the provisions of Chapter 290 RSMo, as amended, related to prevailing wages to be paid on public works.
b. If the bid/quote is accepted, the vendor will be required to comply with the prevailing wages as fixed by the Missouri Department of Labor and Industrial Relations, in effect as of the date of the issuance of the solicitation, for each affected craft and type of workmen in the following county(ies): **Cooper**. The **Annual Wage Order #18, Incremental Increase #7** is attached to the bid documents**.** Pursuant to the requirements of the Chapter 290 RSMo., not less than the prevailing hourly rate of wages, as set out in the wage order attached to and made part of the specification for work under the contract, must be paid to all workers performing work under the contract.
c. The Contractor shall provide all information, reports and other documentation as required by MHTC to ensure compliance with Chapter 290 RSMo., as amended, relating to prevailing wages to be paid on public works.
d. The Contractor shall forfeit a penalty to the contracting public body of $100 per day (or portion of a day) for each worker that is paid less than the prevailing rate for any work done under the contract by the contractor or by any subcontractor.

Permits, Licenses and Safety Issues

The contract price shall include any necessary permits and licenses required by law incidental to the work. Local ordinances requiring building permits are not applicable to state agencies.

Liquidated Damages

a. In the event the successful Contractor fails to deliver the material within the time specified, the Department and the public will sustain damages because of such delay in delivery, the exact extent of which would be difficult to ascertain, and in order to liquidate such damage in advance it is agreed that the **sum of $300 per day,** for each assessable calendar day on which the delivery has not been completed, is reasonable and the best estimate which the parties can arrive at as liquidated damages, and it is therefore agreed that said amount will be withheld from payments due the Contractor or otherwise collected from the Contractor as liquidated damages.

b. **Saturdays, Sundays, holidays and days whereas the Department has suspended work** shall not be assessable days.

Time of Completion

If this bid is accepted, it is hereby agreed that work will begin not later than the date specified in the "Notice to Proceed" and will diligently be prosecuted in order to complete the work and billing within **30-working days** from the date specified. Completion of work will be based on FINAL ACCEPTANCE of the building; "SUBSTANTIAL COMPLETION" will not be accepted as basis for completion.

A Working Day

Is defined as any day when, soil and weather conditions would permit the major operation of the project for six hours or more unless other unavoidable conditions prevent the contractor's operation. If conditions require the contractor to stop work in less than six hours, the day will not be counted as a working day. Working days will begin as soon as notice to proceed is issued. In order for MoDOT not to change a workday due to unavoidable conditions, the contractor must have enough forces, equipment, and materials on site to begin the project. The contractor must notify MoDOT inspector before 12:00 noon of said working day if forces will not be present.